SITE PLAN SUBMISSION SET

FOR

HOFFMAN PROPERTY

TAX MAP ID#'S
6272-00-103351
6272-00-191306
6272-00-204261

45 OLD FARM ROAD
TOWN OF RED HOOK,
DUTCHESS COUNTY, STATE OF NEW YORK

SUBMITTED: 01/16/13
REVISION DATE: 06/05/15

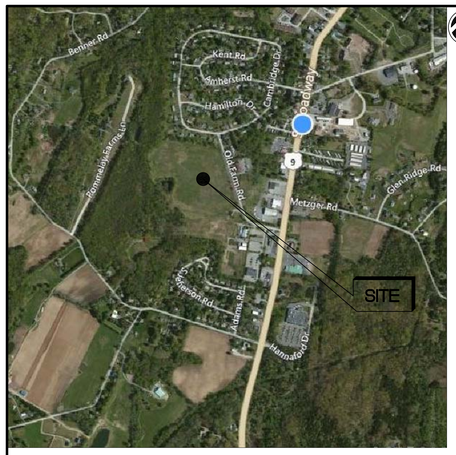

LOCATION MAP
SCALE: 1"=500'

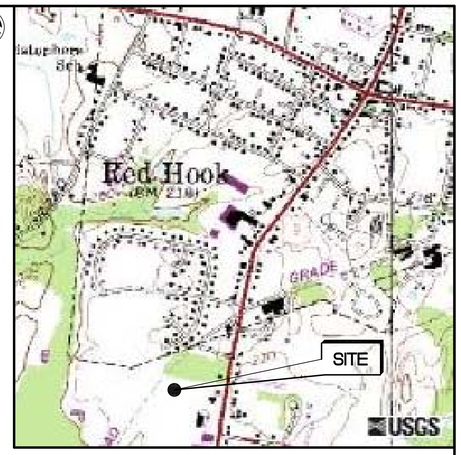

VICINITY MAP
SCALE: 1"=1000'

OWNER INFORMATION:

ROGER HOFFMAN
19 OLD FARM ROAD
RED HOOK, NY 12571
845-758-5668

APPLICANT:

KIRCHHOFF PROPERTIES

KIRCHHOFF PROPERTIES, LLC
199 WEST ROAD SUITE 101
PLEASANT VALLEY, NY 12569
845-635-2000

PROJECT ENGINEER:

LRC GROUP

Land Planning ~ Civil Engineering
Land Surveying ~ Environmental Services
Landscape Architecture

85 Civic Center Plaza, Suite 103
Poughkeepsie, NY 12601
Tel-845-243-2880

160 West Street, Suite E
Cromwell, CT 06416
Tel-860-635-2877

STATE OF NEW YORK
RODNEY E. MORRISH
LICENSED PROFESSIONAL ENGINEER

PROJECT ARCHITECT:

UNION STUDIO
ARCHITECTURE & COMMUNITY DESIGN
140 UNION STREET
PROVIDENCE RI, 02903
401-272-4724

WETLAND CONSULTANT:

ECOLOGICAL SOLUTUIONS, LLC
1248 SOUTHFORD ROAD
SOUTHBURY, CT 06488
203-910-4716

TRAFFIC CONSULTANT:

MASER CONSULTING P.A.
11 BRADHURST AVENUE
HAWTHORNE, NY 10532
914-347-7500

ARCHEOLOGICAL CONSULTANT:

HARTGEN ARCHEOLOGICAL ASSOCIATES, INC.
1744 WASHINGTON AVENUE EXTENSION
RENSSELAER, NY 12144
518-283-0534

SITE PLAN AND SUBDIVISION APPROVAL
TOWN OF RED HOOK, DUTCHESS COUNTY, NEW YORK

APPROVED BY RESOLUTION OF THE PLANNING BOARD OF THE TOWN OF RED HOOK, NEW YORK ON THE _____ DAY OF _____, 2015. SUBJECT TO ALL REQUIREMENTS AND CONDITIONS OF SAID RESOLUTION ANY CHANGE, ERASURE, MODIFICATION, OR REVISION OF THIS PLAT, AS APPROVED, SHALL VOID THIS APPROVAL SIGNED THIS _____ DAY _____, 2015.

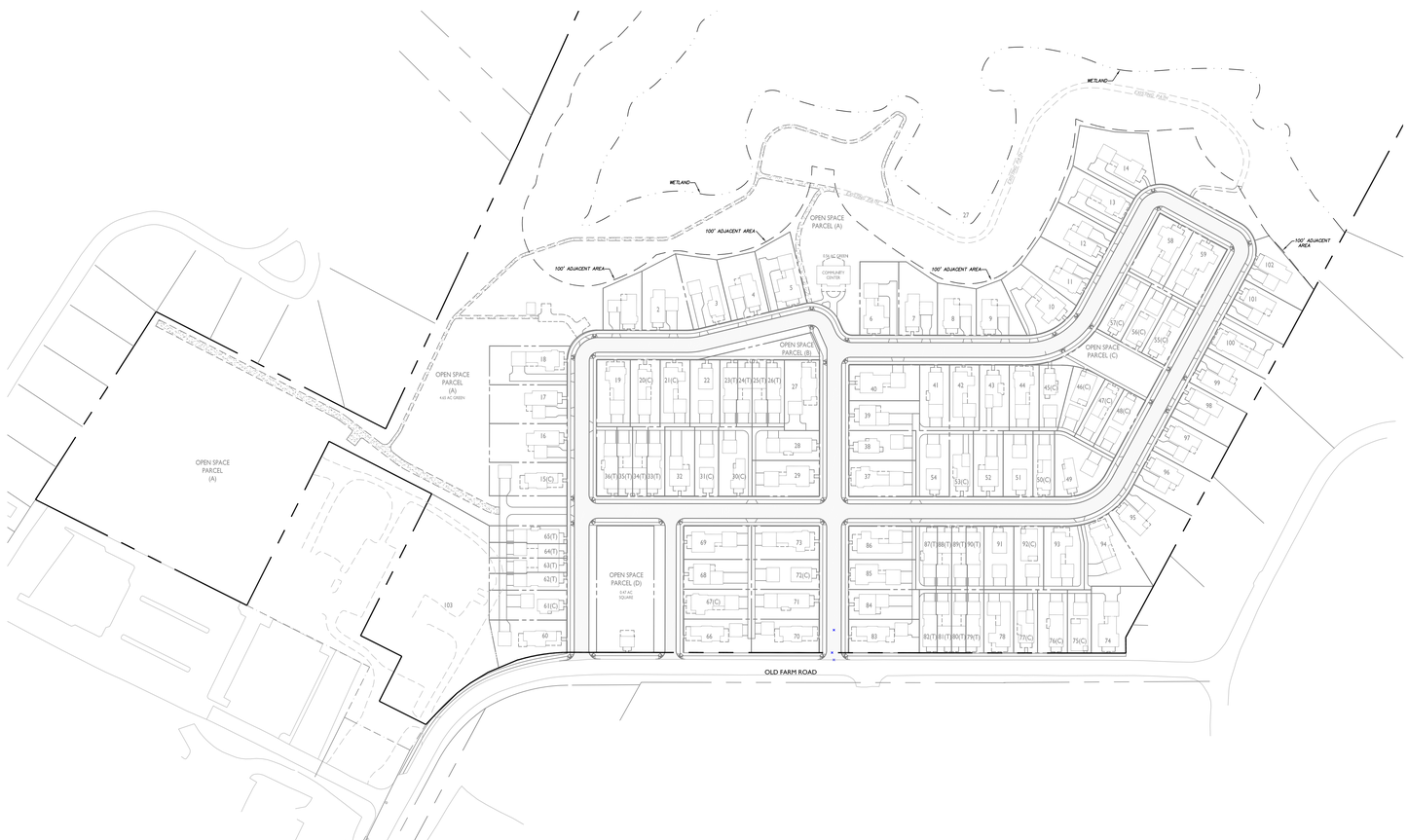

OVERALL PROPERTY PLAN
SCALE: 1"=100'

LIST OF DRAWINGS

SHEET 1 OF 28	CV-1	COVER SHEET
SHEET 2 OF 28		PROPERTY SURVEY (BY OTHERS)
SHEET 3 OF 28	EX-1	EXISTING CONDITIONS AND DEMOLITION PLAN
SHEET 4 OF 28		WETLANDS DELINEATION MAP (BY OTHERS)
SHEET 5 OF 28	SB-1	OVERALL SUBDIVISION PLAN
SHEET 6 OF 28	SB-2	SUBDIVISION PLAT
SHEET 7 OF 28	SB-3	EASEMENT PLAN
SHEET 8 OF 28	SB-4	PHASE ONE SUBDIVISION PLAN
SHEET 9 OF 28	SP-1	SITE PLAN
SHEET 10 OF 28	SG-1	SITE GRADING PLAN
SHEET 11 OF 28	SD-1	SITE DRAINAGE PLAN
SHEET 12 OF 28	UT-1	UTILITIES PLAN
SHEET 13 OF 28	SDS-1	SDS DESIGN PLAN
SHEET 14 OF 28	OP-1	PHASING PLAN / EROSION CONTROL PLAN PHASE 1
SHEET 15 OF 28	OP-2	PHASING PLAN / EROSION CONTROL PLAN PHASES 2,3 & 4
SHEET 16 OF 28	OP-3	PHASING PLAN / EROSION CONTROL PLAN PHASES 5 THRU 8
SHEET 17 OF 28	PP-1	ROAD PLAN
SHEET 18 OF 28	PP-2	ROAD PROFILE PLAN
SHEET 19 OF 28	LL-1	STREET TREE PLANTING PLAN
SHEET 20 OF 28	LP-1	STREET LIGHTING PLAN
SHEET 21 OF 28	TT-1	TRUCK TURNING PLAN
SHEET 22 OF 28	TT-2	TRUCK TURNING PLAN
SHEET 23 OF 28	AM-1	AMENITIES PLAN
SHEET 24 OF 28	DN-1	SITE DETAILS
SHEET 25 OF 28	DN-2	WATER DETAILS
SHEET 26 OF 28	DN-3	SEWER DETAILS
SHEET 27 OF 28	DN-4	STORMWATER DETAILS
SHEET 28 OF 28	DN-5	EROSION CONTROL DETAILS

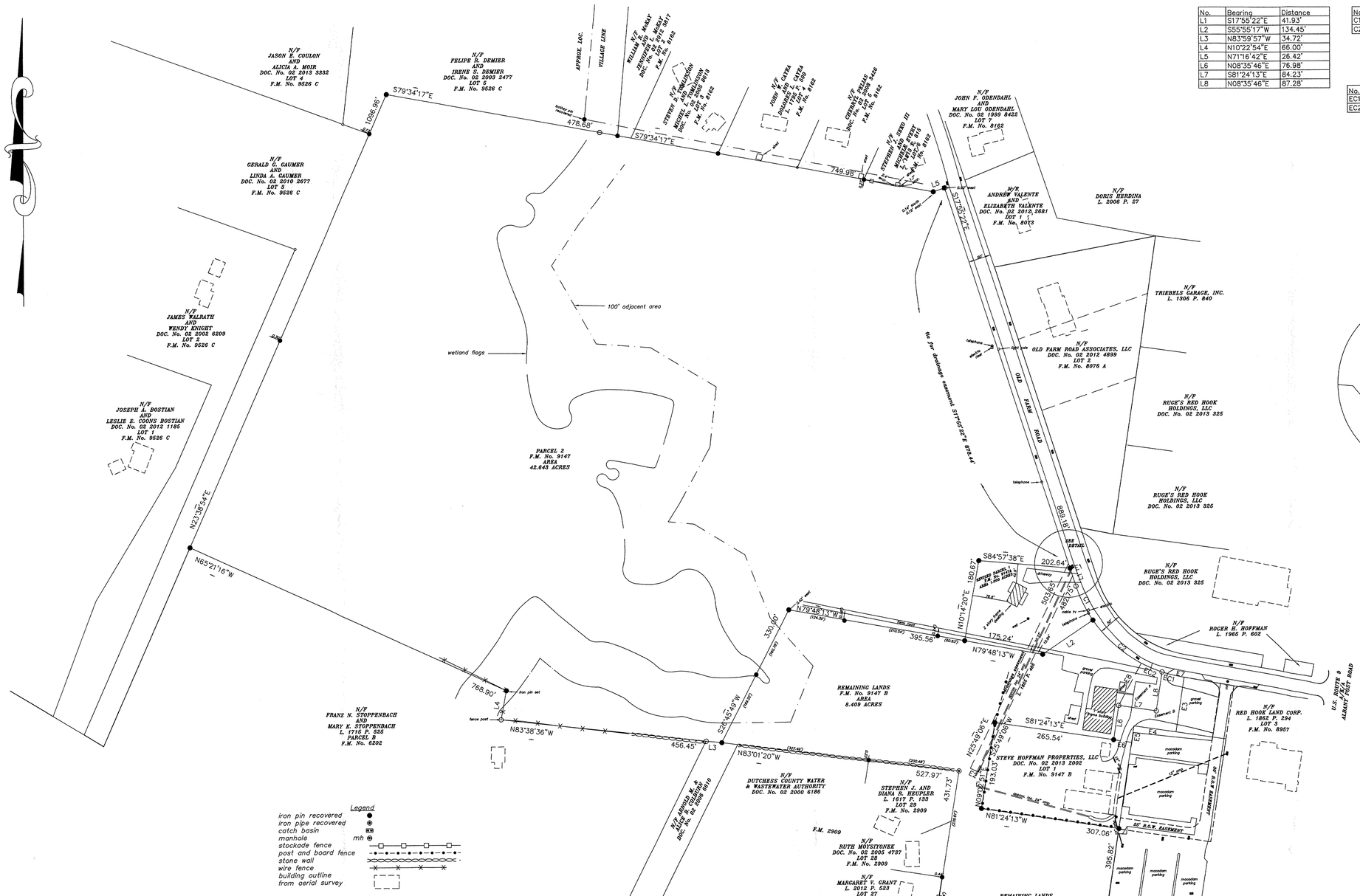

No.	Bearing	Distance
L1	S17°55'22"E	41.93'
L2	S55°55'17"W	134.45'
L3	N83°59'57"W	34.72'
L4	N10°22'54"E	66.00'
L5	N71°16'42"E	26.42'
L6	N08°35'46"E	76.98'
L7	S81°24'13"E	84.23'
L8	N08°35'46"E	87.28'

No.	Delta	Radius	Arc Length	Chord Length	Chord Bearing
C1	16°09'22"	300.00	84.59	84.31	S26°00'03"E
C2	37°15'29"	300.00	195.08	191.66	S52°42'28"E

TABLES FOR EASEMENTS ON LOT 1 AND REMAINING LANDS AS SHOWN ON FILED MAP No. 9147–B

No.	Delta	Radius	Arc Length	Chord Length	Chord Bearing
EC1	08°25'27"	300.00	44.11	44.07	S75°32'56"E
EC2	09°35'15"	300.00	50.20	50.14	S66°32'35"E

No.	Bearing	Distance
E1	S17°55'22"E	28.93'
E2	N64°10'54"W	20.00'
E3	S08°35'46"W	122.61'
E4	N81°24'13"W	94.23'
E5	S08°35'46"W	36.98'
E6	N81°24'13"W	40.00'
E7	S79°45'40"E	6.16'
E8	N28°15'03"E	106.33'

Legend

- iron pin recovered
- iron pipe recovered
- catch basin
- manhole
- stockade fence
- post and board fence
- stone wall
- wire fence
- building outline from aerial survey

Wetlands were flagged by Ecological Solutions, LLC, and were located in October 2004 and October 2011.

Parcel 2 is shown on a plat entitled "Lot Line Alteration and Subdivision Prepared For Roger Hoffman," Town of Red Hook, Dutchess County, New York, and filed in the Dutchess County Clerk's Office on November 20, 1990 as Map No. 9147.
Revised Parcel 1 is shown on a plat entitled " Amendment to Filed Map No. 9747, Line Alteration Prepared For Roger Hoffman," Town of Red Hook, Dutchess County, New York, and filed in the Dutchess County Clerk's Office on August 8, 2007 as Map No. 9147–A.
Remaining Lands is shown on a plat entitled " Amendment to Filed Map No. 9747–A, Subdivision Prepared For Roger Hoffman," Town of Red Hook, Dutchess County, New York, and filed in the Dutchess County Clerk's Office on March 15, 2013 as Map No. 9147–B.

Easement A and Easement B refer to a Declaration of Easement and provisions for common driveway and parking maintenance filed in the Dutchess County Clerk's Office as Document No. 02 2013 1482.

WELCH SURVEYING
7 ORLICH ROAD
RED HOOK, NEW YORK 12571
(845) 876–1000

I, Marie T. Welch, L.S., do hereby certify that this map was prepared from an actual field survey. Map completed on October 6, 2014.

MARIE T. WELCH, L.S.
N.Y.S. License No. 049418

© 2014 Welch Surveying All Rights Reserved

"Unauthorized alteration or addition to a survey map bearing a licensed land surveyor's seal is a violation of section 7209, subdivision 2, of the New York State Education Law." "Copies from the original of this survey map not marked with an original of the land surveyor's inked or embossed seal shall not be considered to be a valid true copy."

Underground utilities, if any, not shown.

PROPERTY SURVEY OF PARCEL 1, PARCEL 2 AND REMAINING LANDS

PREPARED FOR

RED HOOK ACRES, LLC

SITUATE IN

TOWN OF RED HOOK

DUTCHESS COUNTY — *NEW YORK*

SCALE : 1" = 100' — *OCT. 6, 2014*

Job No. 13024

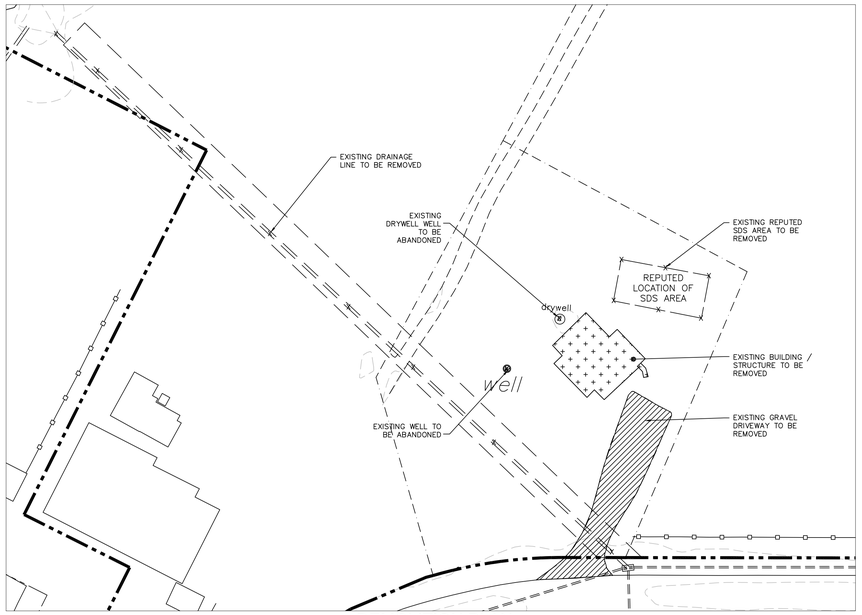

DEMOLITION PLAN

SCALE:1"=40'

GRAPHIC SCALE

40 20 0 40

SCALE IN FEET

DEMOLITION NOTES:

1. CONTRACTOR SHALL NOTIFY "DIG SAFELY NEW YORK" AT 1-800-962-7692 AT 72 HOURS PRIOR TO COMMENCEMENT OF ANY WORK IN ACCORDANCE WITH UFPO CODE RULE 53, 16 NYCRR PART 753.
2. PRIOR TO DEMOLISHING ANY BUILDINGS/STRUCTURES, THE CONTRACTOR SHALL PERFORM A PRE-DEMOLITION SURVEY IN ACCORDANCE WITH STATE AND FEDERAL REGULATIONS. THE CONTRACTOR SHALL OBTAIN ALL NECESSARY PERMITS AND APPROVALS BY THE AUTHORITY HAVING JURISDICTION.
3. CONFORM TO APPLICABLE CODE FOR DEMOLITION OF STRUCTURES, SAFETY OF ADJACENT STRUCTURES, DUST CONTROL, RUNOFF CONTROL, AND HAULING, DISPOSAL AND STORAGE OF DEBRIS.
4. PROVIDE, ERECT, AND MAINTAIN TEMPORARY BARRIERS AND SECURITY DEVICES.
5. LOCATE AND IDENTIFY ALL EXISTING UTILITIES WITHIN THE CONSTRUCTION AREA. DISCONNECT AND SEAL OR CAP OFF UTILITY SERVICES THAT WILL BE AFFECTED BY THIS PROJECT. NOTIFY AFFECTED UTILITY COMPANIES BEFORE STARTING WORK AND COMPLY WITH THEIR REQUIREMENTS. VERIFY THAT UTILITIES HAVE BEEN DISCONNECTED AND CAPPED.
6. FIELD VERIFY EXISTING CONDITIONS AND CORRELATE WITH REQUIREMENTS INDICATED ON DEMOLITION PLAN TO DETERMINE EXTENT OF SELECTIVE DEMOLITION REQUIRED.
7. CONDUCT DEMOLITION OPERATIONS TO PREVENT INJURY TO PEOPLE AND DAMAGE TO ADJACENT BUILDINGS AND FACILITIES TO REMAIN. ENSURE SAFE PASSAGE OF PEOPLE AROUND SELECTIVE DEMOLITION AREA.
8. REMOVE AND TRANSPORT DEBRIS IN A MANNER THAT WILL PREVENT SPILLAGE ON ADJACENT SURFACES AND AREAS.
9. CLEAN ADJACENT STRUCTURES AND IMPROVEMENTS OF DUST, DIRT AND DEBRIS CAUSED BY SELECTIVE DEMOLITION OPERATIONS. RETURN ADJACENT AREAS TO ORIGINAL CONDITION BEFORE START OF SELECTIVE DEMOLITIONS.
10. PROMPTLY DISPOSE OF DEMOLISHED MATERIALS. ALL DEBRIS RESULTING FROM DEMOLITION ACTIVITIES SHALL BE DISPOSED OF OFF-SITE AT A FACILITY APPROVED TO RECEIVE THE DEBRIS. DO NOT ALLOW DEMOLISHED MATERIALS TO ACCUMULATE ON-SITE. DO NOT BURN DEMOLISHED MATERIALS ON-SITE.
11. CONTRACTOR SHALL LOCATE AND REMOVE ALL COMPONENTS OF THE EXISTING SDS SERVICING ALL BUILDINGS PROPOSED FOR DEMOLITION.
12. SEPTIC TANKS, LEACHING BASINS, CESSPOOLS AND OTHER SIMILAR FACILITIES ASSOCIATED WITH THE BUILDING BEING DEMOLISHED SHALL BE PUMPED FREE OF SEPTAGE OR SEWAGE, REMOVED AND THE RESULTING HOLE SHALL BE BACKFILLED IN LIFTS OF COMPACTED SDS FILL MATERIAL AS APPROVED BY THE DESIGN ENGINEER AND PLACE AS PRESCRIBED.
13. THE ABANDONMENT AND / OR DECOMMISSIONING OF ALL EXISTING SUBSURFACE DISPOSAL SYSTEMS MUST BE IN ACCORDANCE WITH THE PROCEDURES APPROVED BY THE DUTCHESS COUNTY DEPARTMENT OF HEALTH AND CERTIFIED BY A NYS PROFESSIONAL ENGINEER.

DEMOLITION LEGEND:

X X X X X — ITEM(S) TO BE REMOVED

STRUCTURE TO BE REMOVED

PAVEMENT TO BE REMOVED

SURVEY NOTES:

1. BOUNDARY AS SHOWN IS PER MARIE WELSH SURVEY.
2. TOPOGRAPHY SURVEY AS SHOWN IS PER GOLDEN AERIAL SURVEY INC.
3. SITE FEATURES ARE FROM GOLDEN AERIAL SURVEY AND FIELD VERIFIED BY MARIE WELCH UNLESS OTHERWISE INDICATED IN THESE NOTES.
4. TOWN ROW IS SHOWN AS APPROXIMATE PER FIELD MAPS AND DEED OF RECORD. AN ACTUAL SURVEY OF THE PROPERTIES EAST OF OLD FARM ROAD HAS NOT BEEN COMPLETED.
5. WETLANDS DELINEATED OCTOBER 2004, THEN AGAIN ON OCTOBER 2011 BY ECOLOGICAL SOLUTIONS WITNESSED BY NYSDEC. A SIGNED NYSDEC WETLAND DELINEATION MAP IS INCLUDED IN THIS PLANSET (SHEET 4 OF 28).
6. WILDLIFE HABITAT AND HABITAT COVER TYPES AS IDENTIFIED ON THIS PLAN IS PER THREATENED AND ENDANGERED SPECIES HABITAT SUITABILITY ASSESSMENT REPORT COMPLETED BY ECOLOGICAL SOLUTIONS, LLC.
7. THERE ARE NO FLOOD PLAINS LOCATED ON-SITE.
8. THERE ARE NO ROCK OUTCROPS LOCATED ONSITE.

LEGEND:

EXISTING CONDITIONS:

- 110 — EXISTING MAJOR CONTOUR
- 102 — EXISTING MINOR CONTOUR
- EXISTING PROPERTY LINE
- 500.5 — EXISTING SPOT GRADE
- EXISTING UNDERGROUND STORM LINE
- EXISTING FENCE LINE
- EXISTING STONEWALL
- EXISTING TREE LINE
- DENOTES STEEP SLOPES
- EXISTING DEEP TEST LOCATION
- EXISTING PERCOLATION TEST LOCATION
- EXISTING INFILTRATION TEST LOCATION

SYMBOLS:

- EXISTING SIGN
- EXISTING CATCH BASIN
- EXISTING GUY WIRE
- EXISTING HYDRANT
- EXISTING LIGHT POLE
- EXISTING WELL
- EXISTING DRAINAGE MANHOLE
- EXISTING UTILITY POLE
- WV — EXISTING WATER VALVE

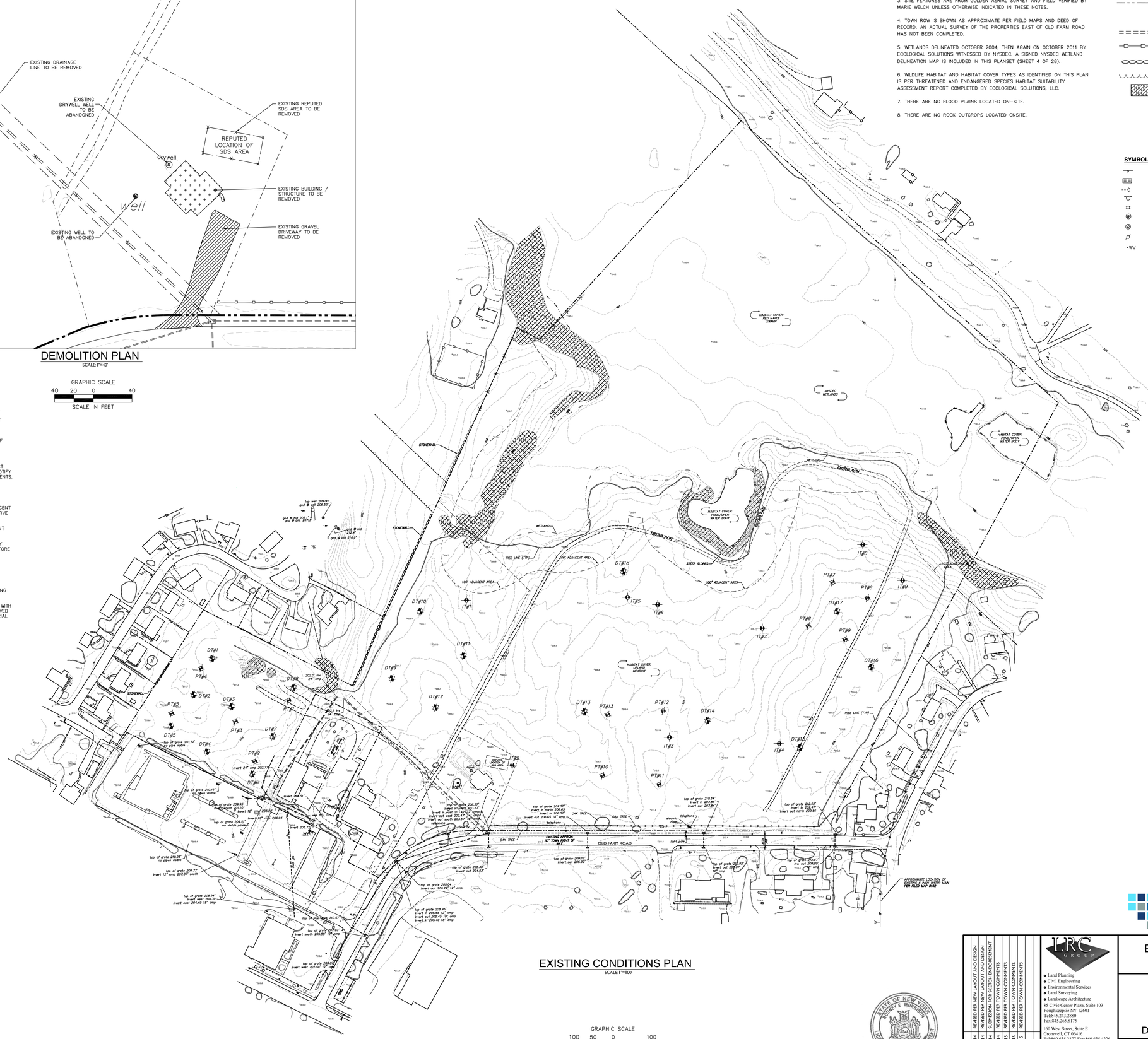

EXISTING CONDITIONS PLAN

SCALE:1"=100'

GRAPHIC SCALE

100 50 0 100

SCALE IN FEET

KIRCHHOFF PROPERTIES

#	Date	Revisions:
1	06.27.14	REVISED PER NEW LAYOUT AND DESIGN
2	09.05.14	REVISED PER NEW LAYOUT AND DESIGN
3	09.25.14	SUBMISSION FOR SKETCH ENDORSEMENT
4	10.10.14	REVISED PER TOWN COMMENTS
5	01.23.15	REVISED PER TOWN COMMENTS
6	02.17.15	REVISED PER TOWN COMMENTS
7	06.05.15	REVISED PER TOWN COMMENTS

LRC GROUP
- Land Planning
- Civil Engineering
- Environmental Services
- Land Surveying
- Landscape Architecture

85 Civic Center Plaza, Suite 103
Poughkeepsie NY 12601
Tel:845.243.2880
Fax:845.265.8175

160 West Street, Suite E
Cromwell, CT 06416
Tel:860.635.2877 Fax:860.635.4226
www.lrcconsult.com

Land Resource Consultants, Inc.
LRC Engineering & Surveying, P.C.
LRC Environmental Services, Inc.
LRC Engineering and Surveying, LLC

STATE OF NEW YORK · RODNEY E. MIDDLEBROOK · LICENSED PROFESSIONAL ENGINEER · 073364

EXISTING CONDITIONS AND DEMOLITION PLAN

HOFFMAN PROPERTY

OLD FARM ROAD
TOWN OF RED HOOK
DUTCHESS COUNTY NEW YORK

Designed	SMC	CAD File	EX12126301	EX-1	
Drawn	SMC	Project No.	12-4263		
Checked	KFC	Date	01.16.13		
Approved	REM	Scale	VARIES	Sheet 3 of 28	

X:\Jobs\Jobs 2012\12-1263_Kirchhoff_Hoffman Farm\DWGS\EX12126301.dwg
Layout: EX dwg

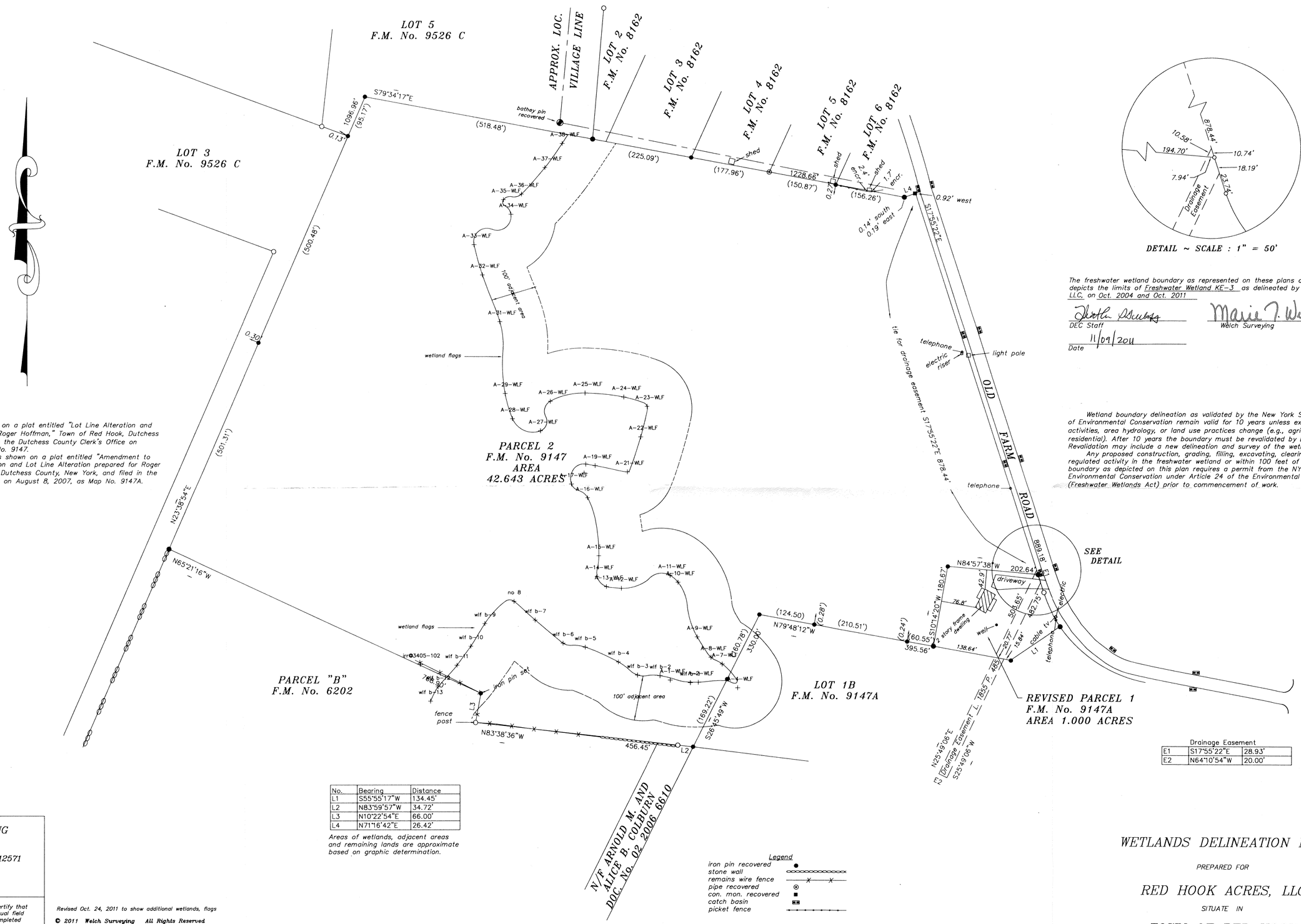

DETAIL ~ SCALE : 1" = 50'

The freshwater wetland boundary as represented on these plans accurately depicts the limits of Freshwater Wetland KE-3 as delineated by Ecological Solutions, LLC, on Oct. 2004 and Oct. 2011

DEC Staff

Welch Surveying

11/09/2011
Date

Wetland boundary delineation as validated by the New York State Department of Environmental Conservation remain valid for 10 years unless existing exempt activities, area hydrology, or land use practices change (e.g., agricultural to residential). After 10 years the boundary must be revalidated by DEC staff. Revalidation may include a new delineation and survey of the wetland boundary.

Any proposed construction, grading, filling, excavating, clearing or other regulated activity in the freshwater wetland or within 100 feet of the wetland boundary as depicted on this plan requires a permit from the NYS Department of Environmental Conservation under Article 24 of the Environmental Conservation Law (Freshwater Wetlands Act) prior to commencement of work.

Parcel 2 being as shown on a plat entitled "Lot Line Alteration and Subdivision Map prepared for Roger Hoffman," Town of Red Hook, Dutchess County, New York, and filed in the Dutchess County Clerk's Office on November 20, 1990, as Map No. 9147.

Revised Parcel 1 being as shown on a plat entitled "Amendment to F.M. No. 9147, Minor Subdivision and Lot Line Alteration prepared for Roger Hoffman," Town of Red Hook, Dutchess County, New York, and filed in the Dutchess County Clerk's Office on August 8, 2007, as Map No. 9147A.

No.	Bearing	Distance
L1	S55°55'17"W	134.45'
L2	N83°59'57"W	34.72'
L3	N10°22'54"E	66.00'
L4	N71°16'42"E	26.42'

Areas of wetlands, adjacent areas and remaining lands are approximate based on graphic determination.

Drainage Easement

E1	S17°55'22"E	28.93'
E2	N64°10'54"W	20.00'

WELCH SURVEYING

7 ORLICH ROAD
RED HOOK, NEW YORK 12571

(845) 876-1000

I, Marie T. Welch, L.S., do hereby certify that this map was prepared from an actual field survey done Jan. 21, 2008. Map completed January 28, 2008.

MARIE T. WELCH, L.S.
N.Y.S. License No. 49698

Revised Oct. 24, 2011 to show additional wetlands, flags

© 2011 Welch Surveying All Rights Reserved
© 2008 Welch Surveying All Rights Reserved

"Unauthorized alteration or addition to a survey map bearing a licensed land surveyor's seal is a violation of section 7209, subdivision 2, of the New York State Education Law."
"Copies from the original of this survey map not marked with an original of the land surveyor's inked or embossed seal shall not be considered to be a valid true copy."

Underground utilities, if any, not shown.

WETLANDS DELINEATION MAP

PREPARED FOR

RED HOOK ACRES, LLC

SITUATE IN

TOWN OF RED HOOK

DUTCHESS COUNTY — NEW YORK

SCALE : 1" = 100' — JAN. 28, 2008

Job No. 08003

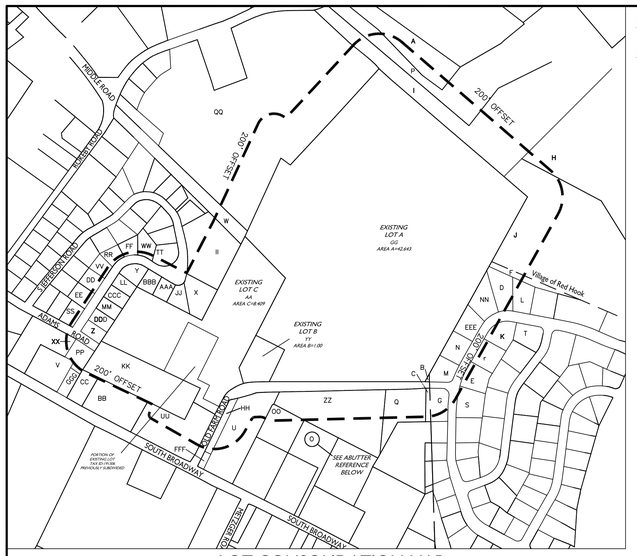

LOT CONSOLIDATION MAP

SCALE: 1"=400'

CURRENT RECORD LOT INFORMATION

TOTAL EXISTING LOT AREA

LOT#	AREA	SBL
A	42.643 AC	6272-00-103351
B	1.00 AC	6272-00-191306
C	8.409 AC	6272-00-204261

PROJECT ACREAGE=52.05 ACRES

LOTS ARE CONSOLIDATED INTO A SINGLE PARCEL FOR SUBDIVISION PER PLAT MAPS SB-1 THRU SB-3 AS PART OF THIS PROJECT PLANSET.

ABUTTERS LIST FOR SUBJECT PROPERTY

A
Joseph A. Bostian
124 Rokeby Rd
Red Hook, NY 12571
For Property:1348890061720000991329000 0

B
Stephen J. Seko, III
63 Old Farm Rd
Red Hook, NY 12571
For Property:1348890062720000167403000 0

C
John F. Odendahl
76 Cambridge Dr
Red Hook, NY 12571
For Property:1348890062720000182407000 0

D
William R. McKay
62 Cambridge Dr
Red Hook, NY 12571
For Property:1348010062720013108426000 0

E
Ricky J. Klawson & Betty A. Klawson
71 Cambridge Dr
Red Hook, NY 12571
For Property:1348010062720013164428000 0

F
Felipe R. Demier
60 Pommelay Farm La
Red Hook, NY 12571
For Property:1348010062720013096443000 0

G
John F. Odendahl
76 Cambridge Dr
Red Hook, NY 12571
For Property:1348010062720013180413000 0

H
Jason E. Coulon
51 Pommelay Farms Ln
Red Hook, NY 12571
For Property:1348890062720000020442000 0

I
Gerald G. Gaumer
47 Pommelay Farms Ln
Red Hook, NY 12571
For Property:1348890062720000016405000 0

J
Felipe R. Demier
60 Pommelay Farms Ln
Red Hook, NY 12571
For Property:1348890062720000065498000 0

K
Arthur W. Carl
63 Cambridge Dr
Red Hook, NY 12571
For Property:1348010062720013135434000 0

L
Lisa M. Paquin
60 Cambridge Dr
Red Hook, NY 12571
For Property:1348010062720013107438000 0

M
Stephen J. Seko, III
65 Old Farm Rd
Red Hook, NY 12571
For Property:1348010062720013161410000 0

N
Cherryl Pelias
72 Cambridge Dr
Red Hook, NY 12571
For Property:1348010062720013146412000 0

O
Ruges Red hook Holdings LLC.
3519 Route 9G
Rhinebeck, NY 12572
For Property:1348890062720000222345000 0

P
James Walrath
39 Pommelay Farms Ln
Red Hook, NY 12571
For Property:1348890061720000993391000 0

Q
Andrew Valente
60 Old Farm Rd
Red Hook, NY 1257
For Property:1348890062720000191393000 0

R
Larry C. Hughes & Alicia C. Hughes
67 Cambridge Dr
Red Hook, NY 12571
For Property:1348010062720013149432000 0

S
Peter S. Papanastasiou
75 Cambridge Dr
Red Hook, NY 12571
For Property:1348010062720013179429000 0

T
Tracy L. HigginBotham
13 Hamilton Drive
Red Hook, NY 12571
For Property: 1348016272131324490000

U
Ruges Red Hook Holdings LLC.
3519 Route 9G
Rhinebeck, NY 12572
For Property:1348890062720000230310000 0

V
David A. Weiss
PO Box 481
Tivoli, NY 12583
For Property:1348890062720017230195000 0

W
Arnold M. Colburn
PO Box 119
Red Hook, NY 12571
For Property:1348890062720000098227000 0

X
Stephen J. Heupler
51 Jefferson Rd
Red Hook, NY 12571
For Property:1348890062720013164263000 0

Y
Thomas P. Decker
43 Jefferson Rd
Red Hook, NY 12571
For Property:1348890062720017163225000 0

Z
Harold E. Martin, LT
33 Jefferson Rd
Red Hook, NY 12571
For Property:1348890062720017202213000 0

AA
Roger H. Hoffman
19 Old Farm Rd
Red Hook, NY 12571
For Property:1348890062720000204261000 0

BB
Red Hook Terminal Inc
157 West Main Street
Wappinger Falls, NY 12590
For Property:1348890062720000237238000 0

CC
Red Hook Terminal Inc
7259 Broadway S
Red Hook, NY 12571
For Property:1348890062720017235217000 0

DD
Willie E. LT Zenker
32 Jefferson Rd
Red Hook, NY 12571
For Property:1348890062720017175204000 0

EE
Benjamin S. Kolbinskie
30 Jefferson Rd
Red Hook, NY 12571
For Property:1348890062720017184201000 0

FF
Jennefer Eccles
7449 Broadway S
Red Hook, NY 12571
For Property:1348890062720017150217000 0

GG
Roger H. Hoffman
19 Old Farm Rd
Red Hook, NY 12571
For Property:1348890062720000103351000 0

HH
Roger H. Hoffman
8 Old Farm Rd
Red Hook, NY 12571
For Property:1348890062720000233298000 0

II
Dutchess County Water and
27 High St
Poughkeepsie, NY 12601
For Property:1348890062720013135261000 0

JJ
Ruth Mosyisonek
49 Jefferson Rd
Red Hook, NY 12571
For Property:1348890062720013169254000 0

KK
Lyceum Six Partners
7270 Broadway S
Red Hook, NY 12571
For Property:1348890062720000220253000 0

LL
Gordon F. Mergendahl, LT
41 Jefferson Rd
Red Hook, NY 12571
For Property:1348890062720017172222000 0

MM
Michael Rhynders
37 Jefferson Rd
Red Hook, NY 12571
For Property:1348890062720017187218000 0

NN
Steven D. Tomlinson
64 Cambridge Dr
Red Hook, NY 12571
For Property:1348010062720013113420000 0

OO
Ruges Red Hook Holdings LLC.
3519 Route 9G
Rhinebeck, NY 12572
For Property:1348890062720000220324000 0

PP
Jeff R. Ackerly
26 Adams Rd
Red Hook, NY 12571
For Property:1348890062720017218209000 0

QQ
Franz N. Stoppenbach
96 Rokeby Rd
Red Hook, NY 12571
For Property:1348890062720000040255000 0

RR
Lillian T. Schad, LT
36 Jefferson Rd
Red Hook, NY 12571
For Property: 1348890062720017157210000 0

SS
Peter J. Wohlfahrt
19 Adams Rd
Red Hook, NY 12571
For Property:1348890062720017196198000 0

TT
Arthur B. Roberts
42 Jefferson Rd
Red Hook, NY 12571
For Property:1348890062720017148238000 0

UU
Red Hook Land Corp
7277 Broadway S
Red Hook, NY 12571
For Property:1348890062720000244274000 0

VV
Margaret A. Rowland
34 Jefferson Rd
Red Hook, NY 12571
For Property:1348890062720017165206000 0

WW
Fredrick J. Hilbrandt
40 Jefferson Rd
Red Hook, NY 12571
For Property:1348890062720017146226000 0

XX
Stewarts Shops Corp
PO Box 435
Saratoga Springs, NY 12866
For Property:1348890062720017219182000 0

YY
Roger H. Hoffman
25 Old Farm Rd
Red Hook, NY 12571
For Property:1348890062720000191306000 0

ZZ
Old Farm Road Associates
PO Box 3300
Kingston, NY 12402
For Property:1348890062720000203362000 0

AAA
Margaret V. Grant
500 W Kerly Corners Road
Tivoli, NY 12583
For Property:1348890062720017166246000 0

BBB
Sandra E. Krol
45 Jefferson Rd
Red Hook, NY 12571
For Property:1348890062720017165235000 0

CCC
Kathy Winings
39 Jefferson Rd
Red Hook, NY 12571
For Property:1348890062720017179221000 0

DDD
Burton Vanaken LT
35 Jefferson Rd
Red Hook, NY 12571
For Property: 1348836272171942160000

EEE
John W. Cayea
68 Cambridge Dr
Red Hook, NY 12571
For Property: 1348016272131304150000

FFF
Roger H. Hoffman
19 Old Farm Road
Red Hook, NY 12571
For Property: 1348896272023429500 00

GGG
Robert Schultz
7255 South Broadway
Red Hook, NY 12571
For Property: 1348866272172332090000

OVERALL SUBDIVISION PLAN VIEW

SCALE: 1"=100'

GRAPHIC SCALE
100 50 0 100
SCALE IN FEET

SB-1 PLAT NOTES:

1. SEE SB-2 FOR INDIVIDUAL LOT AREAS AND DESCRIPTIONS.

2. SEE SB-3 FOR EASEMENT DESCRIPTIONS.

3. BOUNDARY AS SHOWN IS PER MARIE WELSH SURVEY, NO FLOOD PLAIN LOCATED ON-SITE.

4. WETLANDS DELINEATED OCTOBER 2004, THEN AGAIN ON OCTOBER 2011 BY ECOLOGICAL SOLUTIONS WITNESSED AND ACCEPTED BY NYSDEC, SIGNED WETLAND DELINEATION MAP INCLUDED IN THIS PROJECT PLANSET (SHEET 4 28).

LEGEND:
EXISTING PROPERTY LINES
PROPOSED LOT LINES

KIRCHHOFF PROPERTIES

#	Date	Revisions
1	06.27.14	REVISED PER NEW LAYOUT AND DESIGN
2	09.05.14	REVISED PER NEW LAYOUT AND DESIGN
3	09.25.14	SUBMISSION FOR SKETCH ENDORSEMENT
4	10.10.14	REVISED PER TOWN COMMENTS
5	01.23.15	REVISED PER TOWN COMMENTS
6	02.27.15	REVISED PER TOWN COMMENTS
7	06.04.15	REVISED PER TOWN COMMENTS

LRC GROUP
- Land Planning
- Civil Engineering
- Environmental Services
- Land Surveying
- Landscape Architecture

85 Civic Center Plaza, Suite 103
Poughkeepsie NY 12601
Tel:845.243.2880
Fax:845.265.8175

160 West Street, Suite E
Cromwell, CT 06416
Tel:860.635.2877 Fax:860.635.4226
www.lrcconsult.com

Land Resource Consultants, Inc.
LRC Engineering & Surveying, P.C.
LRC Environmental Services, Inc.
LRC Engineering and Surveying, LLC

OVERALL SUBDIVISION PLAN

HOFFMAN PROPERTY

OLD FARM ROAD
TOWN OF RED HOOK
DUTCHESS COUNTY NEW YORK

Designed	SMC	CAD File	SB12126301	SB-1	
Drawn	SMC	Project No.	12-1263		
Checked	KFC	Date	01.16.13		
Approved	REM	Scale	1"=100'	Sheet 5 of 28	

X:\Jobs\Jobs 2012\12-1263_Kirchhoff_Hoffman Farm\DWGS\SB12126301.dwg
Layout: SUBDIVISION PLAN 30X42

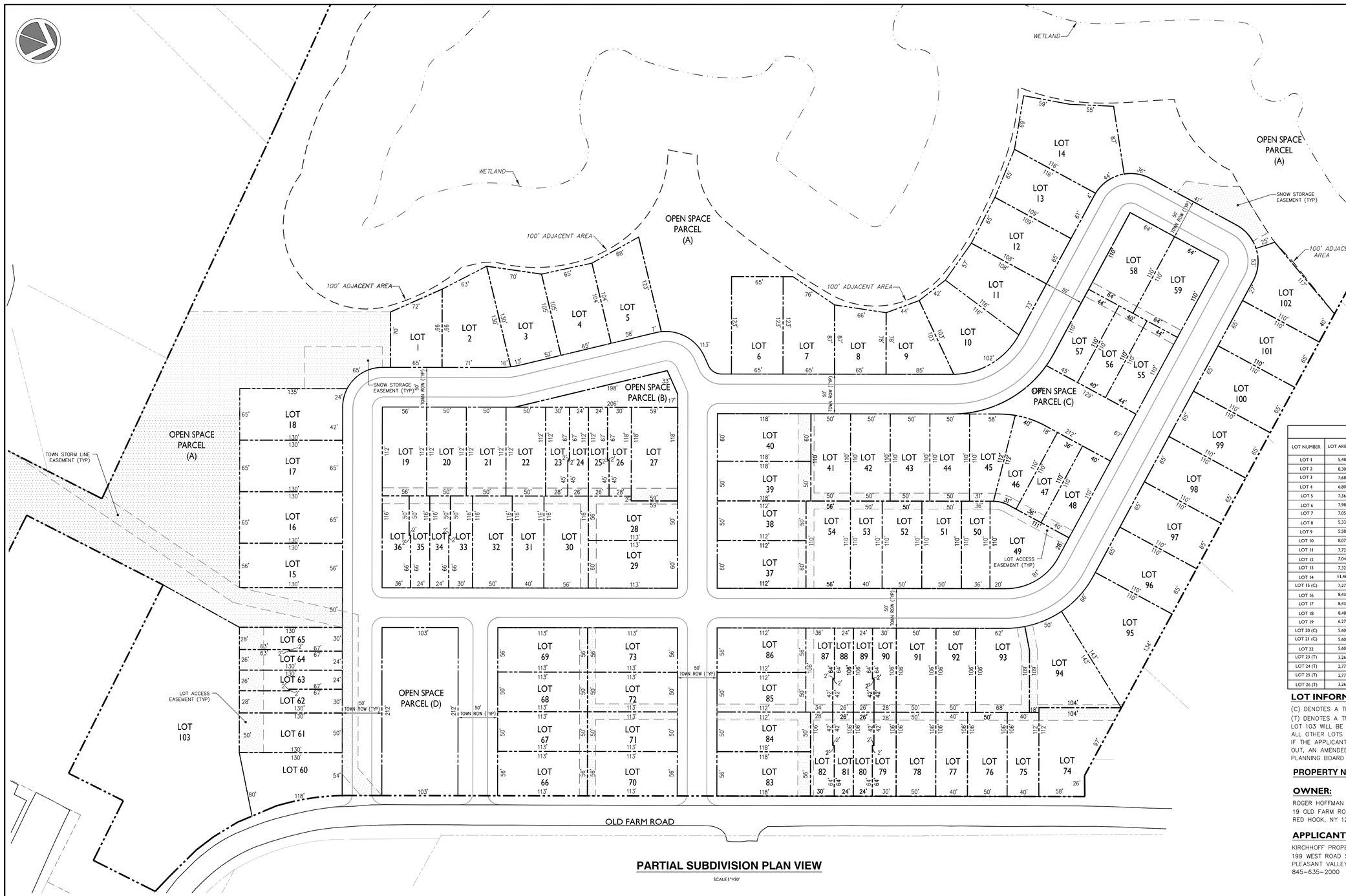

PARTIAL SUBDIVISION PLAN VIEW

SCALE:1"=50'

TND CODE NOTES:

1. FOR ALL INTERIOR LOTS LOCATED ON A LANE, OFF-STREET PARKING AND GARAGES MUST BE ACCESSED FROM THE LANE. CORNER LOTS MAY HOWEVER DERIVE THEIR ACCESS TO OFF-STREET PARKING AND GARAGES FROM THE STREET, AS DEPICTED ON LOT 40.

2. DRIVEWAYS OF ALL LOTS THAT ARE ACCESSED DIRECTLY FROM A STREET (IE. "FRONT LOADED LOTS") SHALL BE NO MORE THAN 12' WIDE AT THE SIDEWALK CROSSING AND ARE PERMITTED TO WIDEN TO 20' WIDE AT A POINT 25' FROM THE FRONT OF THE GARAGE.

3. AS PART OF THE BUILDING PERMIT APPLICATION THE DEVELOPER SHALL SUBMIT A PLOT PLAN FOR EACH INDIVIDUAL LOT WHICH WILL VERIFY COMPLIANCE WITH REQUIRED SETBACKS

SETBACK INFORMATION:

FRONT YARD=2' MIN / 18' MAX.
SIDE YARD=6' MIN.*
REAR YARD (PRINCIPAL BLDG)=20' MIN.
REAR YARD (BACK BLDG)=3' MIN. IF NO REAR LANE OR ALLEY OR 12' MIN. FROM CENTER OF LANE OR ALLEY.

* ZERO FOR TOWNHOUSE LOTS

OPEN SPACE AREA SUMMARY

PARCEL #	AREA	USE
A	1,401,052 SF	MULTI-PURPOSE FIELD / PASSIVE WALKING PATHS DOG PARK / COMMUNITY GARDENING ACTIVE RECREATION / COMMUNITY & FAMILY GATHERING COMMUNITY BUILDING LOCATION
B	4,873 SF	PASSIVE GATHERING YOUTH PLAY SPACE
C	9,894 SF	PASSIVE & ACTIVE RECREATION
D	20,355 SF	PASSIVE & ACTIVE RECREATION COMMUNITY MAIL BUILDING

PROPOSED LOT INFORMATION

LOT NUMBER	LOT AREA (SF)	LOT NUMBER	LOT AREA (SF)	LOT NUMBER	LOT AREA (SF)	LOT NUMBER	LOT AREA (SF)
LOT 1	5,480	LOT 27	6,903	LOT 53 (C)	4,407	LOT 79 (T)	3,096
LOT 2	8,302	LOT 28	5,949	LOT 54	6,170	LOT 80 (T)	2,628
LOT 3	7,681	LOT 29	6,750	LOT 55 (C)	4,809	LOT 81 (T)	2,628
LOT 4	6,800	LOT 30 (C)	6,496	LOT 56 (C)	4,400	LOT 82 (T)	3,096
LOT 5	7,362	LOT 31 (C)	4,640	LOT 57 (C)	4,815	LOT 83	6,608
LOT 6	7,983	LOT 32	5,800	LOT 58	7,009	LOT 84	5,900
LOT 7	7,051	LOT 33 (T)	3,380	LOT 59	7,009	LOT 85	5,600
LOT 8	5,339	LOT 34 (T)	2,884	LOT 60	7,771	LOT 86	6,272
LOT 9	5,583	LOT 35 (T)	2,884	LOT 61 (C)	6,491	LOT 87 (T)	3,732
LOT 10	8,079	LOT 36 (T)	4,076	LOT 62 (T)	3,769	LOT 88 (T)	2,628
LOT 11	7,725	LOT 37	6,741	LOT 63 (T)	3,242	LOT 89 (T)	2,628
LOT 12	7,045	LOT 38	5,600	LOT 64 (T)	3,242	LOT 90 (T)	3,096
LOT 13	7,323	LOT 39	5,900	LOT 65 (T)	3,769	LOT 91	5,300
LOT 14	11,485	LOT 40	7,080	LOT 66	6,343	LOT 92 (C)	5,300
LOT 15 (C)	7,270	LOT 41	5,500	LOT 67 (C)	5,663	LOT 93	7,151
LOT 16	8,439	LOT 42	5,500	LOT 68	5,663	LOT 94	9,224
LOT 17	8,439	LOT 43	5,500	LOT 69	6,341	LOT 95	11,655
LOT 18	8,481	LOT 44	5,500	LOT 70	6,343	LOT 96	7,150
LOT 19	6,272	LOT 45 (C)	4,851	LOT 71	5,663	LOT 97	7,150
LOT 20 (C)	5,600	LOT 46 (C)	4,868	LOT 72	5,663	LOT 98	7,150
LOT 21 (C)	5,600	LOT 47 (C)	3,960	LOT 73	6,342	LOT 99	7,150
LOT 22	5,600	LOT 48 (C)	4,400	LOT 74	8,433	LOT 100	7,150
LOT 23 (T)	3,269	LOT 49	7,564	LOT 75 (C)	4,240	LOT 101	7,150
LOT 24 (T)	2,779	LOT 50 (C)	3,966	LOT 76 (C)	5,300	LOT 102	7,179
LOT 25 (T)	2,779	LOT 51	5,509	LOT 77 (C)	4,240	LOT 103	54,255
LOT 26 (T)	3,269	LOT 52	5,509	LOT 78	5,300	PARCEL A	1,401,052
						PARCEL B	4,873
						PARCEL C	9,894
						PARCEL D	20,355
						ROADS ROW	189,353

LOT INFORMATION TABLE NOTES:

(C) DENOTES A TND COTTAGE
(T) DENOTES A TND TOWNHOUSE
LOT 103 WILL BE RETAINAED BY ROGER HOFFMAN
ALL OTHER LOTS ARE TND HOUSES OR COTTAGES.
IF THE APPLICANT WOULD LIKE TO CHANGE A UNIT TYPE DURING THE PROJECT BUILD OUT, AN AMENDED LOT TABLE WILL BE SUBMITTED TO THE TOWN OF RED HOOK PLANNING BOARD FOR THEIR APPROVAL.

PROPERTY NOTES:

ZONING–TND RESIDENTIAL / TND COMMERCIAL
SCHOOL DISTRICT–RED HOOK CENTRAL
FIRE DISTRICT–TOWN OF RED HOOK

OWNER:

ROGER HOFFMAN
19 OLD FARM ROAD
RED HOOK, NY 12571

APPLICANT:

KIRCHHOFF PROPERTIES, LLC
199 WEST ROAD SUITE 101
PLEASANT VALLEY, NY 12571
845–635–2000

SUBDIVISION PLAT SB-2 NOTES:

1. 1. "SUBDIVISION PLAT" FOR THIS PROJECT COMPRISED OF SB–1, 2, 3 AND 4.

2. SB–1 IS OVERALL PARCEL AND MAP.

3. SB–2 IS RESIDENTIAL LOT DETAIL PLAT.

4. SB–3 IS EASEMENT PLAT.

5. ALL REQUIRED AGREEMENTS AND EASEMENTS FOR UTILITIES AND ACCESS WILL BE DEVELOPED AFTER REVIEW BY APPROVING AGENCIES. ALL EASEMENTS MUST BE SUBMITTED PRIOR TO FINAL PLAT APPROVAL.

6. LOTS LABELED "OPEN SPACE PARCELS" MUST REMAIN OPEN SPACE PARCELS AND MAY NOT BE FURTHERED DEVELOPED WITHOUT APPROVAL FROM THE PLANNING BOARD.

LEGEND:
EXISTING PROPERTY LINES
PROPOSED LOT LINES

GRAPHIC SCALE
50 25 0 50
SCALE IN FEET

KIRCHHOFF PROPERTIES

No.	Date	Revisions
1.	06.27.14	REVISED PER NEW LAYOUT AND DESIGN
2.	09.05.14	REVISED PER NEW LAYOUT AND DESIGN
3.	09.25.14	SUBMISSION FOR SKETCH ENDORSEMENT
4.	10.10.14	REVISED PER TOWN COMMENTS
5.	01.23.15	REVISED PER TOWN COMMENTS
6.	03.27.15	REVISED PER TOWN COMMENTS
7.	06.05.15	REVISED PER TOWN COMMENTS

LRC GROUP
- Land Planning
- Civil Engineering
- Environmental Services
- Land Surveying
- Landscape Architecture

85 Civic Center Plaza, Suite 103
Poughkeepsie NY 12601
Tel:845.243.2880
Fax:845.265.8175

160 West Street, Suite E
Cromwell, CT 06416
Tel:860.635.2877 Fax:860.635.4226
www.lrcconsult.com

Land Resource Consultants, Inc.
LRC Engineering & Surveying, P.C.
LRC Environmental Services, Inc.
LRC Engineering and Surveying, LLC

SUBDIVISION PLAT

HOFFMAN PROPERTY

OLD FARM ROAD
TOWN OF RED HOOK
DUTCHESS COUNTY NEW YORK

Designed	SMC	CAD File	SB12126302	
Drawn	SMC	Project No.	12-1263	SB-2
Checked	KFC	Date	01.16.13	
Approved	REM	Scale	1"=50'	Sheet 6 of 28

X:\Jobs\Jobs 2012\12-1263_Kirchhoff_Hoffman Farm\DWGS\SB12126302.dwg
Layout: SUBDIVISION PLAN 30X42

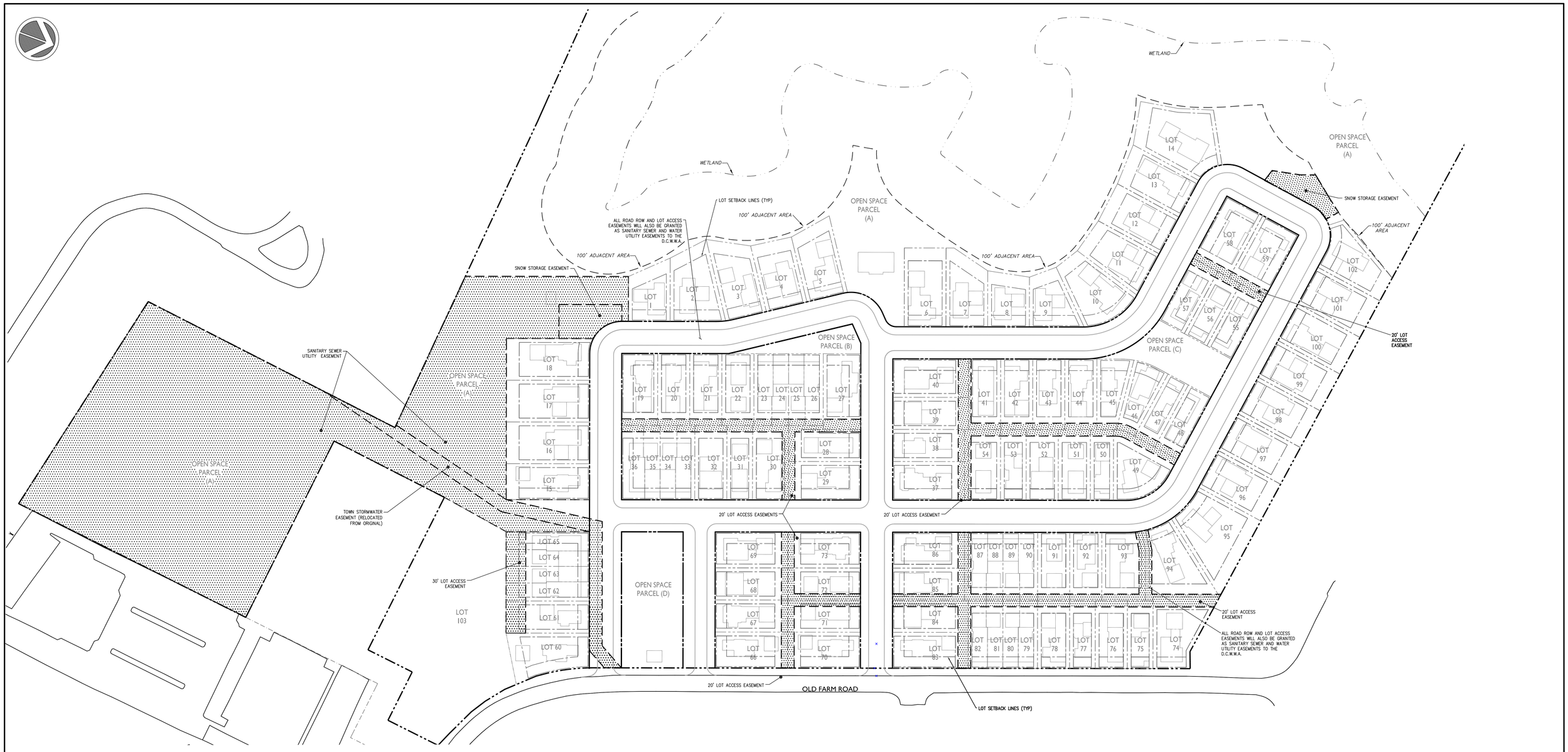

OWNERSHIPS AND RESPONSIBILITIES:

PHYSICAL ITEM	OWNER	MAINTAINER
SUBDIVISION STREETS	TOWN OF RED HOOK	TOWN OF RED HOOK
STREET TREES	TOWN OF RED HOOK	TOWN OF RED HOOK
STREET LIGHTING	(HOA OR DISTRICT)	(HOA)
STREET STORM SYSTEM	TOWN OF RED HOOK	TOWN OF RED HOOK
STREET SNOW REMOVAL	TOWN OF RED HOOK	TOWN OF RED HOOK
LOT ACCESS LANES	HOA	HOA
CIVIC SPACES	HOA	HOA
WATER SYSTEM	DCWWA	DCWWA
SEWER SYSTEM	DCWWA	DCWWA
OPEN SPACE–SDS AREA MAINTENANCE)	HOA	HOA (MOWING) DCWWA (SDS
OPEN SPACE–WETLANDS AND BUFFER	HOA	HOA
STORMWATER PRACTICES	HOA	HOA

NOTE:

A TRANSPORTATION CORPORATION MAY BE REQUIRED TO BE FORMED FOR THE OWNERSHIP AND OPERATIONAL RESPONSIBILITY OF THE WATER DISTRIBUTION SYSTEM AND / OR THE WASTEWATER COLLECTION AND DISPOSAL SYSTEM TO COVER THE INTERVENING PERIOD BETWEEN CONSTRUCTION AND THE TIME THAT THE DCWWA ASSUMES OWNERSHIP.

LEGEND:

- EXISTING PROPERTY LINES
- PROPOSED LOT LINES
- PROPOSED SETBACK LINES
- PROPOSED EASEMENT AREA

GRAPHIC SCALE
60 30 0 60
SCALE IN FEET

KIRCHHOFF PROPERTIES

#	Date	Revisions:
1.	06.27.14	REVISED PER NEW LAYOUT AND DESIGN
2.	09.05.14	REVISED PER NEW LAYOUT AND DESIGN
3.	09.25.14	SUBMISSION FOR SKETCH ENDORSEMENT
4.	10.10.14	REVISED PER TOWN COMMENTS
5.	03.23.15	REVISED PER TOWN COMMENTS
6.	03.27.15	REVISED PER TOWN COMMENTS
7.	06.05.15	REVISED PER TOWN COMMENTS

LRC GROUP
- Land Planning
- Civil Engineering
- Environmental Services
- Land Surveying
- Landscape Architecture

85 Civic Center Plaza, Suite 103
Poughkeepsie NY 12601
Tel:845.243.2880
Fax:845.265.8175

160 West Street, Suite E
Cromwell, CT 06416
Tel:860.635.2877 Fax:860.635.4226
www.lrcconsult.com

Land Resource Consultants, Inc.
LRC Engineering & Surveying, P.C.
LRC Environmental Services, Inc.
LRC Engineering and Surveying, LLC

EASEMENT PLAN

HOFFMAN PROPERTY

OLD FARM ROAD
TOWN OF RED HOOK
DUTCHESS COUNTY NEW YORK

Designed	SMC	CAD File	SB12126303	
Drawn	SMC	Project No.	12-1263	SB-3
Checked	KFC	Date	01.16.13	
Approved	REM	Scale	1"=60'	Sheet 7 of 28

X:\Jobs\Jobs 2012\12-1263_Kirchhoff_Hoffman Farm\DWGS\SB12126303.dwg
Layout: SUBDIVISION PLAN 30X42

HOFFMAN FARM - PHASE I PLAT NOTES

1. THIS PHASE OF THE HOFFMAN FARM SUBDIVISION IS CONSISTENT WITH THE OVERALL SUBDIVISION PLAT MAP AS APPROVED BY THE TOWN OF RED HOOK; ALL CONDITIONS THEREIN APPLY TO THIS PROJECT PHASE.

2. THE FILING OF FUTURE PHASES IS INTENDED TO BE CONSISTENT WITH THE PHASING PLAN.

3. REFERENCED EASEMENTS ON THIS PHASE WILL NOT BE CREATED AT THIS TIME.

4. LOT A TO BE RETAINED BY DEVELOPER, WITH A BLANKET EASEMENT FOR ALL UTILITIES TO THE TRANSPORTATION CORPORATION, DCWWA AND HOA.

5. ALL LOTS FOR SALE ARE SUBJECT TO APPROVAL OF PLOT PLAN BY TOWN BUILDING DEPARTMENT AND / OR PLANNING BOARD.

6. AS PART OF THE BUILDING PERMIT APPLICATION THE DEVELOPER SHALL SUBMIT A PLOT PLAN FOR EACH INDIVIDUAL LOT WHICH WILL VERIFY COMPLIANCE WITH REQUIRED SETBACKS

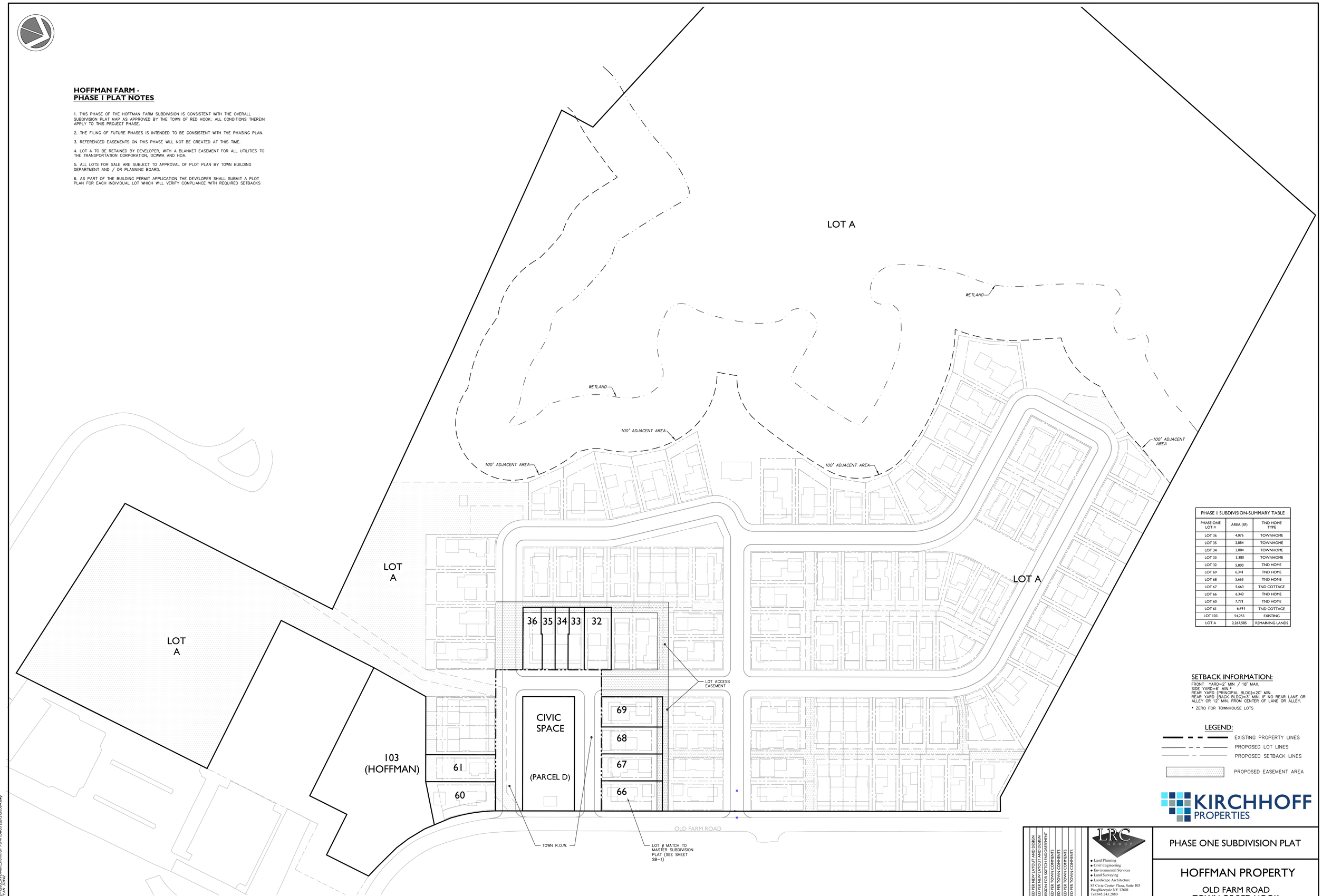

PHASE I SUBDIVISION-SUMMARY TABLE		
PHASE ONE LOT #	AREA (SF)	TND HOME TYPE
LOT 36	4,076	TOWNHOME
LOT 35	2,884	TOWNHOME
LOT 34	2,884	TOWNHOME
LOT 33	3,380	TOWNHOME
LOT 32	5,800	TND HOME
LOT 69	6,341	TND HOME
LOT 68	5,663	TND HOME
LOT 67	5,663	TND COTTAGE
LOT 66	6,343	TND HOME
LOT 60	7,771	TND HOME
LOT 61	6,491	TND COTTAGE
LOT 103	54,255	EXISTING
LOT A	2,267,585	REMAINING LANDS

SETBACK INFORMATION:

FRONT YARD=2' MIN / 18' MAX.
SIDE YARD=6' MIN.*
REAR YARD (PRINCIPAL BLDG)=20' MIN.
REAR YARD (BACK BLDG)=3' MIN. IF NO REAR LANE OR ALLEY OR 12' MIN. FROM CENTER OF LANE OR ALLEY.

* ZERO FOR TOWNHOUSE LOTS

LEGEND:

EXISTING PROPERTY LINES
PROPOSED LOT LINES
PROPOSED SETBACK LINES
PROPOSED EASEMENT AREA

KIRCHHOFF PROPERTIES

#	Date	
1.	06.27.14	REVISED PER NEW LAYOUT AND DESIGN
2.	09.05.14	REVISED PER NEW LAYOUT AND DESIGN
3.	09.25.14	SUBMISSION FOR SKETCH ENDORSEMENT
4.	10.10.14	REVISED PER TOWN COMMENTS
5.	01.23.15	REVISED PER TOWN COMMENTS
6.	03.27.15	REVISED PER TOWN COMMENTS
7.	06.05.15	REVISED PER TOWN COMMENTS

Revisions:

LRC GROUP
- Land Planning
- Civil Engineering
- Environmental Services
- Land Surveying
- Landscape Architecture

85 Civic Center Plaza, Suite 103
Poughkeepsie NY 12601
Tel:845.243.2880
Fax:845.265.8175

160 West Street, Suite E
Cromwell, CT 06416
Tel:860.635.2877 Fax:860.635.4226
www.lrcconsult.com

Land Resource Consultants, Inc.
LRC Engineering & Surveying, P.C.
LRC Environmental Services, Inc.
LRC Engineering and Surveying, LLC

PHASE ONE SUBDIVISION PLAT

HOFFMAN PROPERTY

OLD FARM ROAD
TOWN OF RED HOOK
DUTCHESS COUNTY NEW YORK

Designed	SMC	CAD File	SB12126304
Drawn	SMC	Project No.	12-1263
Checked	KFC	Date	01.16.13
Approved	REM	Scale	1"=60'

SB-4

X:\Jobs\Jobs 2012\12-1263_Kirchhoff_Hoffman Farm\DWGS\SB12126304.dwg
Layout: SUBDIVISION PLAN 30X42

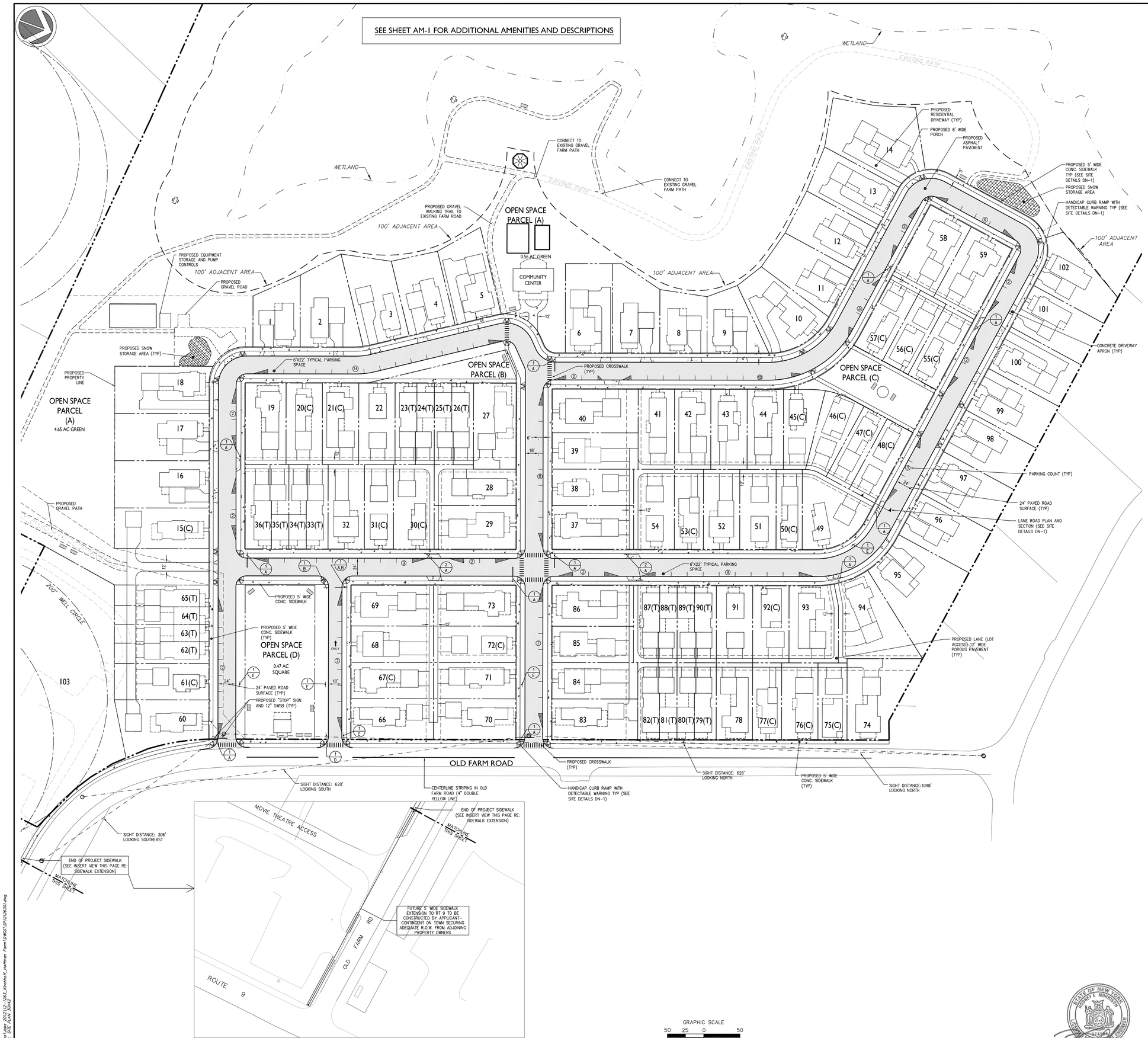

INSERT VIEW FOR SIDEWALK EXTENSION TO ROUTE 9

SCALE:1"=50'

NOTES:

1. BOUNDARY AS SHOWN IS PER MARIE WELSH SURVEY, NO FLOOD PLAIN LOCATED ON-SITE.

2. WETLANDS DELINEATED OCTOBER 2004, AND AGAIN ON OCTOBER 2011 BY ECOLOGICAL SOLUTIONS WITNESSED AND ACCEPTED BY NYSDEC ON NOVEMBER 9, 2011.

3. THE POSTED SPEED LIMIT ON OLD FARM ROAD IS 30 MPH. THE MINIMUM REQUIRED STOP LINE SIGHT DISTANCE PER RED HOOK DPW SHALL BE 300 FEET.

4. SEE SHEETS SB-2 & SB-3 FOR ALL PROPOSED LOT, EASEMENT AND SETBACK INFORMATION FOR THE PROJECT.

5. TOWN CODE PROHIBITS THE "LOADING, UNLOADING, OPENING, CLOSING OR OTHER HANDLING OF BUILDING MATERIALS OR SIMILAR OBJECTS BETWEEN THE HOURS OF 8:00 PM TO 7:00 AM. ADDITIONALLY, TOWN CODE PROHIBITS THE OPERATION OF "ANY TOOLS OR EQUIPMENT USED IN CONSTRUCTION BETWEEN THE HOURS OF 8:00 PM AND 8:00 AM. ALL PROVISIONS OF THE TOWN CODE SHALL BE COMPLIED WITH UNLESS OTHERWISE APPROVED BY THE APPROPRIATE AUTHORITY.

6. UNLESS OTHERWISE WAIVED BY THE PLANNING BOARD, AN AREA VARIANCE FROM THE TOWN OF RED HOOK ZONING BOARD OF APPEALS IS REQUIRED FOR A GARAGE LESS THAN 20' FROM THE FRONT OF THE HOUSE.

7. ALL FRONT PORCHES ARE TO BE A MIN. 8' DEEP.

8. FOR ALL INTERIOR LOTS LOCATED ON A LANE, OFF-STREET PARKING AND GARAGES MUST BE ACCESSED FROM THE LANE. CORNER LOTS MAY HOWEVER DERIVE THEIR ACCESS TO OFF-STREET PARKING AND GARAGES FROM THE STREET, AS DEPICTED ON LOT 40.

9. DRIVEWAYS OF ALL LOTS THAT ARE ACCESSED DIRECTLY FROM A STREET (IE "FRONT LOADED LOTS") SHALL BE NO MORE THAN 12' WIDE AT THE SIDEWALK CROSSING AND ARE PERMITTED TO WIDEN TO 20' WIDE AT A POINT 25' FROM THE FRONT OF THE GARAGE.

10. THE BUILDINGS SHOWN ON THE SITE PLAN ARE ILLUSTRATIVE ONLY. FOR LOTS LABELED "C" (COTTAGE), ALL TND COTTAGE UNITS SHOWN IN THE APPROVED SITE AND ARCHITECTURE PACKAGE NOTED IN THE RESOLUTION OF SITE PLAN APPROVAL OR SUBSEQUENTLY APPROVED BY THE PLANNING BOARD ARE PERMITTED. FOR LOTS LABELED "T" (TOWNHOUSE), ALL TND TOWNHOUSE UNITS SHOWN IN THE APPROVED SITE AND ARCHITECTURE PACKAGE NOTED IN THE RESOLUTION OF SITE PLAN APPROVAL OR SUBSEQUENTLY APPROVED BY THE PLANNING BOARD ARE PERMITTED. FOR ALL REMAINING UNLABELED LOTS, TND COTTAGE UNITS AND TND HOUSES SHOWN IN THE APPROVED SITE AND ARCHITECTURE PACKAGE NOTED IN THE RESOLUTION OF SITE PLAN APPROVAL OR SUBSEQUENTLY APPROVED BY THE PLANNING BOARD ARE PERMITTED.

NYSDEC WETLANDS:

THE PROPOSED PROJECT WILL BE COMPLETED AND MAINTAINED IN COMPLETE CONFORMANCE WITH THE NEW YORK STATE DEPARTMENT OF ENVIRONMENTAL CONSERVATION FRESHWATER WETLANDS PERMIT REQUIREMENTS, PART 663.

1. THE FOLLOWING ACTIVITIES ARE ALLOWED WITHIN A NEW YORK STATE FRESHWATER WETLAND AND ITS ADJACENT AREA AND DO NOT REQUIRE A PERMIT OR LETTER OF PERMISSION FROM THE NYSDEC;

~ THE CONTINUATION OF LAWFULLY EXISTING USES AND CONTINUING ALL ACTIVITIES ASSOCIATED WITH ANY SUCH USES, WHERE SUCH CONTINUANCE DOES NOT NOT INVOLVE EXPANSION OR SIGNIFICANT ALTERATION OF THE EXISTING USE AND DOES NOT EFFECT ADDITIONAL WETLAND AREA.

~HIKING AND PICNICKING AND OTHER NON-MOTORIZED FORMS OF OUTDOOR ACTIVITIES, WHERE NO SIGNIFICANT IMPAIRMENT OF THE WETLAND OR ITS BENEFITS IS INVOLVED.

~ESTABLISHING WALKING TRAILS, WHERE NO SIGNIFICANT IMPAIRMENT OF THE WETLAND OR ITS BENEFITS IS INVOLVED.

LOT UNIT LAYOUT NOTE:

FINAL HOME POSITIONS, DRIVEWAYS AND PORCHES ARE TO BECOME SPECIFIC WITH EACH INDIVIDUAL PLOT PLAN SUBMITTED FOR BUILDING PERMIT. THE INDIVIDUAL PLOT PLAN SHALL SHOW ALL REQUIRED SETBACKS AS LISTED ON SHEET SB-3.

TND UNIT TYPE SUMMARY:

HOMES	62	(60.8% OF TOTAL) (20 MIN REQUIRED)
COTTAGES	20	(19.6% OF TOTAL) (20 MIN REQUIRED)
TOWNHOMES	20	(19.6% OF TOTAL) (20 MIN REQUIRED)
TOTAL	102	

PROPOSED OPEN SPACE SUMMARY:

SIZE (AC)	PROPOSED USE
24.88	WETLANDS AND BUFFER AREA

PROPOSED CIVIC SPACE SUMMARY:

SIZE (AC)	PROPOSED USE
4.65	GREEN SPACE/COMMUNITY GARDEN/RECREATION/TRAILS
0.56	GREEN SPACE/COMMUNITY CENTER/TRAILS
0.47	SQUARE/MAIL KIOSK/BUS STOP
TOTAL 5.68 AC (10.9%)	

PARKING SUMMARY CHART

ITEM	REQUIRED	PROVIDED
PARKING REQUIREMENTS:		
2.0 SPACES PER DWELLING UNIT	102 X 2=204 SPACES REQUIRED	204 SPACES *
HANDICAPPED SPACES REQUIRED	NONE REQUIRED	NONE
ON STREET PARKING	NONE REQUIRED	95
		TOTAL PARKING=299

* EACH BUILDING WILL HAVE A MINIMUM OF TWO (2) OFF-STREET PARKING SPACES LOCATED EITHER IN A GARAGE OR DESIGNATED PARKING AREA LOCATED IN THE THIRD LOT LAYER. ANY LOT THAT MAY BE DEVELOPED WITH AN ACCESSORY APARTMENT SHALL PROVIDE ONE (10 ADDITIONAL PARKING SPACE LOCATED IN THE THIRD LOT LAYER.

SIGN LEGEND

NO.	LEGEND	QTY.
A	STOP	16
B	DO NOT ENTER	2
C	ONE WAY	1
D	ONE WAY	1
E	NO PARKING ANYTIME	4

NOTE: SIGNAGE TO BE CONSISTENT WITH TOWN/STATE AND MUTCD STANDARDS

SIGNS

SIGN LEGEND No.

LEGEND

- PROPOSED ASPHALT PAVEMENT
- PROPOSED SNOW STORAGE AREA
- PROPOSED CONCRETE SIDEWALK
- PROPOSED GRAVEL PATH
- PROPOSED SIGN
- PROPOSED CURB
- PROPOSED SANITARY MANHOLE
- PROPOSED CATCH BASIN

KIRCHHOFF PROPERTIES

#	Date	Revisions
1	06.27.14	REVISED PER NEW LAYOUT AND DESIGN
2	09.05.14	REVISED PER NEW LAYOUT AND DESIGN
3	09.25.14	SUBMISSION FOR SKETCH ENDORSEMENT
4	10.10.14	REVISED PER TOWN COMMENTS
5	01.23.15	REVISED PER TOWN COMMENTS
6	02.27.15	REVISED PER TOWN COMMENTS
7	06.05.15	REVISED PER TOWN COMMENTS

STATE OF NEW YORK · RODNEY E. MORRISON · LICENSED PROFESSIONAL ENGINEER · 074364

LRC GROUP
- Land Planning
- Civil Engineering
- Environmental Services
- Land Surveying
- Landscape Architecture

55 Civic Center Plaza, Suite 103
Poughkeepsie NY 12601
Tel:845.243.2880
Fax:845.265.8175

160 West Street, Suite E
Cromwell, CT 06416
Tel:860.635.2877 Fax:860.635.4226
www.lrcconsult.com

Land Resource Consultants, Inc
LRC Engineering & Surveying, P.C.
LRC Environmental Services, Inc
LRC Engineering and Surveying, LLC

SITE PLAN

HOFFMAN PROPERTY

OLD FARM ROAD
TOWN OF RED HOOK
DUTCHESS COUNTY NEW YORK

Designed	SMC	CAD File	SP12126301
Drawn	SMC	Project No.	12-1263
Checked	KFC	Date	01.16.13
Approved	REM	Scale	1"=50'

SP-1

X:\Jobs\Jobs 2012\12-1263_Kirchhoff_Hoffman Farm\DWGS\SP12126301.dwg
Layout: SITE PLAN 30X42

PLAN VIEW

SCALE: 1"=50'

LEGEND

	ASPHALT PAVEMENT SURFACE
	POROUS PAVEMENT AREA
	INFILTRATION BED AREA
X 162	PROPOSED SPOT ELEVATION
160	PROPOSED MAJOR CONTOUR LINE
162	PROPOSED MINOR CONTOUR LINE
162	EXISTING CONTOUR LINE
FF	FINISH FLOOR ELEVATION
BF	BASEMENT FLOOR ELEVATION
GAR	GARAGE FLOOR ELEVATION
X HP	HIGH POINT
X LP	LOW POINT
1	LOT NUMBER

GRAPHIC SCALE

50 25 0 50

SCALE IN FEET

KIRCHHOFF PROPERTIES

#	Date	Revisions
1	06.27.14	REVISED PER NEW LAYOUT AND DESIGN
2	08.06.14	REVISED PER NEW LAYOUT AND DESIGN
3	09.25.14	SUBMISSION FOR SKETCH ENDORSEMENT
4	10.10.14	REVISED PER TOWN COMMENTS
5	01.23.15	REVISED PER TOWN COMMENTS
6	03.27.15	REVISED PER TOWN COMMENTS
7	04.06.15	REVISED PER TOWN COMMENTS

STATE OF NEW YORK · RODNEY F. MORRISON · 071436 · LICENSED PROFESSIONAL ENGINEER

LRC GROUP

- Land Planning
- Civil Engineering
- Environmental Services
- Land Surveying
- Landscape Architecture

85 Civic Center Plaza, Suite 103
Poughkeepsie NY 12601
Tel:845.243.2880
Fax:845.265.8175

160 West Street, Suite E
Cromwell, CT 06416
Tel:860.635.2877 Fax:860.635.4226
www.lrcconsult.com

Land Resource Consultants, Inc.
LRC Engineering & Surveying, P.C.
LRC Environmental Services, Inc.
LRC Engineering and Surveying, LLC

SITE GRADING PLAN

HOFFMAN PROPERTY

OLD FARM ROAD
TOWN OF RED HOOK
DUTCHESS COUNTY NEW YORK

Designed	SMC	CAD File	SG121263 01	SG-1	
Drawn	SMC	Project No.	12-1263		
Checked	KFC	Date	01.16.13		
Approved	RBM	Scale	1"=50'		Sheet 10 of 28

X:\Jobs\12263 2012\12-1263_Kirchhoff_Hoffman Farm\DWGS\SG121263.dwg
Oct 01, 2014 - 2:00pm, rbm

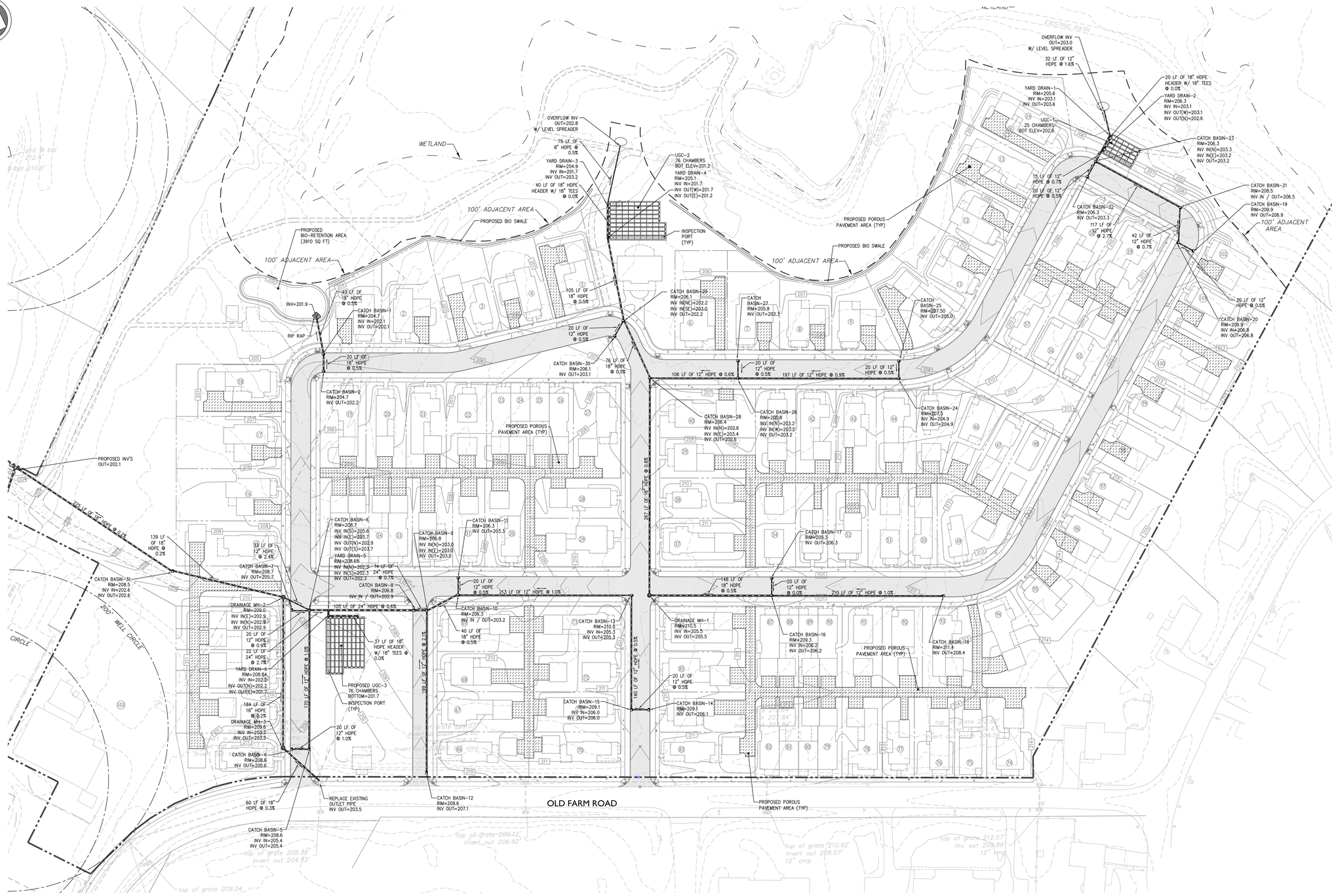

PLAN VIEW

SCALE: 1"=50'

GRADING AND DRAINAGE NOTES

1. ALL EXISTING STRUCTURES NOTED TO BE REMOVED, FENCING, TREES, & ETC., WITHIN CONSTRUCTION AREA SHALL BE REMOVED & DISPOSED OF OFF SITE. ANY BURNING ON SITE SHALL BE SUBJECT TO LOCAL ORDINANCES.

2. CONTRACTOR SHALL NOTIFY ALL UTILITY COMPANIES HAVING UNDERGROUND UTILITIES ON SITE OR IN RIGHT-OF-WAY PRIOR TO EXCAVATION. CONTRACTOR SHALL CONTACT UTILITY LOCATING COMPANY AND LOCATE ALL UTILITIES PRIOR TO GRADING START.

3. SITE GRADING SHALL NOT PROCEED UNTIL EROSION CONTROL MEASURES HAVE BEEN INSTALLED.

4. FLOW CHARACTERISTICS ARE MAINTAINED IN THE POST DEVELOPMENT, CONSISTENT WITH EXISTING CONDITIONS. RUNOFF FROM THE PARKING LOT AND POROUS PAVEMENT DISCHARGE TO THE EXISTING DRAINAGE MANHOLE AT REDUCED RATES AS DESCRIBED IN THE SWPPP.

GENERAL CONSTRUCTION NOTES

1. ALL PIPES SHALL BE LAID ON STRAIGHT ALIGNMENTS AND EVEN GRADES USING A PIPE LASER OR OTHER ACCURATE METHOD.

2. STORM PIPES SHALL MAINTAIN (10' MIN. HORIZONTAL 1.5' VERTICAL MIN.) SEPARATION DISTANCE FROM WATER LINES, OR ADDITIONAL PROTECTION MEASURES WILL BE REQUIRED.

3. RELOCATION OF EXISITING UTILITIES AND UTILITY STRUCTURES, TO BE COMPLETED IN ACCORDANCE WITH OWNER, UTILITY COMPANY, TOWN, AND STATE REQUIREMENTS.

4. THE CONTRACTOR SHALL COMPACT THE PIPE BACKFILL IN 8" LIFTS ACCORDING TO THE PIPE BEDDING DETAILS. TRENCH BOTTOM SHALL BE STABLE IN HIGH GROUNDWATER AREAS. A PIPE FOUNDATION SHALL BE USED IN AREAS OF ROCK EXCAVATION. STORM SEWERS MAY BE PLACED PRIOR TO PLACING FILL.

5. THE CONTRACTOR SHALL PROVIDE AND MAINTAIN MAINTENANCE OF TRAFFIC DEVICES FOR PROTECTION OF VEHICLES AND PEDESTRIANS CONSISTING OF DRUMS, BARRIERS, SIGNS, LIGHTS, FENCES AND UNIFORMED TRAFFICMEN AS REQUIRED, ORDERED BY THE ENGINEER OR REQUIRED BY THE LOCAL GOVERNING AUTHORITIES.

LEGEND

- ASPHALT PAVEMENT STRUCTURE
- POROUS PAVEMENT AREA
- INFILTRATION BED AREA
- PROPOSED STORM LINE
- PROPOSED UNDERDRAIN
- PROPOSED DRYWELL
- PROPOSED CATCH BASIN

GRAPHIC SCALE

50 25 0 50

SCALE IN FEET

KIRCHHOFF PROPERTIES

No.	Date	Revisions
1.	06.27.14	REVISED PER NEW LAYOUT AND DESIGN
2.	09.05.14	REVISED PER NEW LAYOUT AND DESIGN
3.	09.25.14	SUBMISSION FOR SKETCH ENDORSEMENT
4.	10.10.14	REVISED PER TOWN COMMENTS
5.	01.23.15	REVISED PER TOWN COMMENTS
6.	03.27.15	REVISED PER TOWN COMMENTS
7.	06.05.15	REVISED PER TOWN COMMENTS

STATE OF NEW YORK · ROBERT E. MORRISSEY · 071416 · LICENSED PROFESSIONAL ENGINEER

LRC GROUP

- Land Planning
- Civil Engineering
- Environmental Services
- Land Surveying
- Landscape Architecture

85 Civic Center Plaza, Suite 103
Poughkeepsie NY 12601
Tel:845.243.2880
Fax:845.265.8175

160 West Street, Suite E
Cromwell, CT 06416
Tel:860.635.2877 Fax:860.635.4226
www.lrcconsult.com

Land Resource Consultants, Inc.
LRC Engineering & Surveying, P.C.
LRC Environmental Services, Inc.
LRC Engineering and Surveying, LLC

SITE DRAINAGE PLAN

HOFFMAN PROPERTY

OLD FARM ROAD
TOWN OF RED HOOK
DUTCHESS COUNTY NEW YORK

Designed	SMC	CAD File	SD121226301
Drawn	SMC	Project No.	12-1263
Checked	KFC	Date	01.16.13
Approved	REM	Scale	1"=50'

SD-1

Sheet 11 of 28

R:\Jobs\Jobs 2012\12-1263_Kirchhoff_Hoffman Farm\DWGS\SD121226301.dwg
Layout: SD1 Drainage Plan

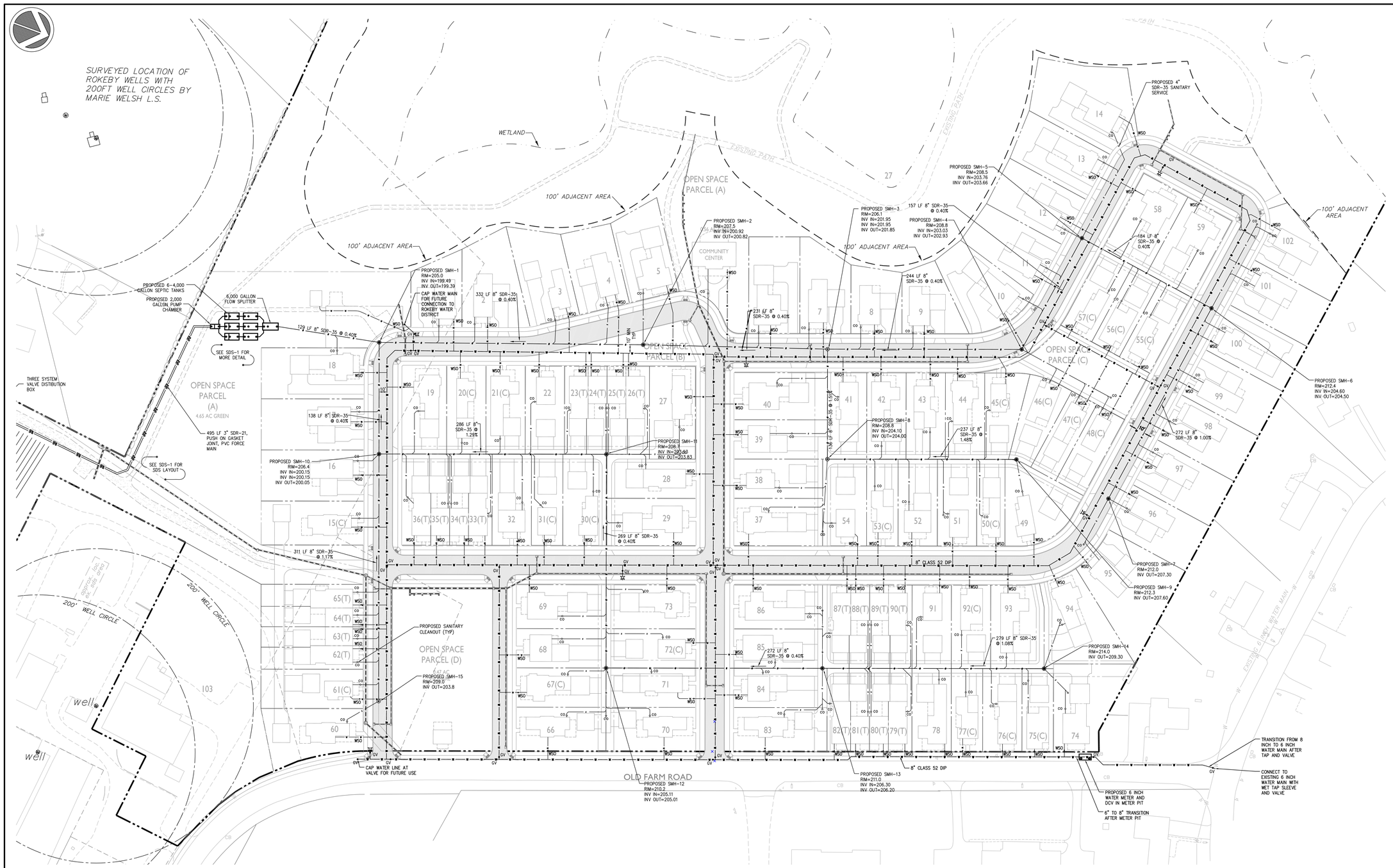

LEGEND

- PROPOSED CONCRETE CURB
- ASPHALT PAVEMENT
- —S——S——S— PROPOSED SANITARY MAIN
- —SFM—SFM—SFM— PROPOSED SANITARY FORCE MAIN
- —W——W——W— PROPOSED WATER MAIN
- GV PROPOSED GATE VALVE
- WSO PROPOSED WATER SHUT OFF VALVE (CORPORATION STOP)
- PROPOSED SANITARY MANHOLE
- CO PROPOSED SANITARY CLEANOUT
- PROPOSED FIRE HYDRANT

PLAN VIEW

SCALE: 1"=50'

FOR SANITARY DESIGN LAYOUT SEE SDS-1

GRAPHIC SCALE

50 25 0 50

SCALE IN FEET

KIRCHHOFF PROPERTIES

#	Date	Revisions
1.	06.27.14	REVISED PER NEW LAYOUT AND DESIGN
2.	09.05.14	REVISED PER NEW LAYOUT AND DESIGN
3.	09.23.14	SUBMISSION FOR SKETCH ENDORSEMENT
4.	10.10.14	REVISED PER TOWN COMMENTS
5.	01.23.15	REVISED PER TOWN COMMENTS
6.	03.27.15	REVISED PER TOWN COMMENTS
7.	06.05.15	REVISED PER TOWN COMMENTS

LRC GROUP

- Land Planning
- Civil Engineering
- Environmental Services
- Land Surveying
- Landscape Architecture

85 Civic Center Plaza, Suite 103
Poughkeepsie NY 12601
Tel:845.243.2880
Fax:845.265.8175

160 West Street, Suite E
Cromwell, CT 06416
Tel:860.635.2877 Fax:860.635.4226
www.lrcconsult.com

Land Resource Consultants, Inc.
LRC Engineering & Surveying, P.C.
LRC Environmental Services, Inc.
LRC Engineering and Surveying, LLC

UTILITIES PLAN

HOFFMAN PROPERTY

OLD FARM ROAD
TOWN OF RED HOOK
DUTCHESS COUNTY NEW YORK

Designed	SMC	CAD File	UT12126301	UT-1	
Drawn	SMC	Project No.	12-1263		
Checked	KFC	Date	01.16.13		
Approved	REM	Scale	1"=50'		Sheet 12 of 28

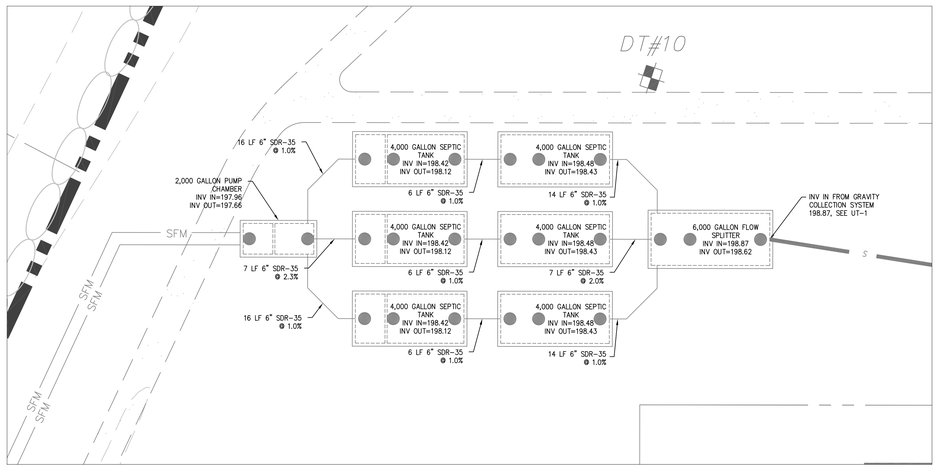

SDS ENLARGMENT VIEW

1"=10'

GRAPHIC SCALE
10 5 0 10
SCALE IN FEET

LEGEND

- ASPHALT PAVEMENT
- PROPOSED SANITARY MAIN
- PROPOSED WATER MAIN
- PROPOSED SANITARY MANHOLE
- PROPOSED PERCOLATION TEST
- PROPOSED DEEP TEST

DCDOH STANDARD NOTES

The design, construction and installation shall be in accordance with this plan and generally accepted standards in effect at the time of construction which include:

Sewage:
"New York State Design Standards for Intermediate Sized Wastewater Treatment Systems (NYSDEC)"
"Recommended Standards for Sewage Treatment Works (Ten States)"
"New York State Department of Health and Dutchess County Department of Health Policies, Procedures, and Standards"
"Dutchess County Department of Health Sanitary Code, Article XI, and Article XIX"
"Dutchess County Department of Health Certificate of Approval Letter"

Water:
"Recommended Standards for Water Works (Ten States)"
"Rural Water Supply, New York State Department of Health"
"New York State Department of Health and Dutchess County Department of Health Policies, Procedures, and Standards"
"Dutchess County Department of Health Sanitary Code, Article XI, and Article V"
"Dutchess County Department of Health Certificate of Approval Letter"

This plan is approved as meeting the appropriate and applied technical standards, guidelines, policies and procedures for arrangement of sewage disposal and treatment and water supply facilities; and, as a condition of this approval, a construction inspection by a representative of the Dutchess County Health Department shall be done to determine that construction at the time of inspection was completed in general conformance with the approved plans and any amendment thereof.

Approval of any plan(s) or amendment thereto shall be valid for a period of five (5) years from the date of approval. Following the expiration of said approval, the plan(s) shall be re-submitted to the Commissioner of Health for consideration for re-approval. Re-submission or revised submission of plans and/or associated documents shall be subject to compliance with the technical standards, guidelines, policies and procedures in effect at the time of the re-submission.

The Dutchess County Department of Health shall be contacted prior to the commencement of the home construction and/or issuance of a building permit for a pre-construction inspection to ensure that the arrangements for water supply and sewage disposal are commenced in accordance with the approved plans and amendments thereto and generally accepted standards.

All wells and SDS existing or approved within 200 feet of the proposed wells and SDS are shown on this plan along with any other environmental hazards in the area that may affect the design and functional ability of the SDS and well.

All proposed wells and service lines on this plan are accessible for installation and placement.

There shall be no vehicular traffic over the sewage disposal system. Prior to construction, the area of the system shall be staked out and fenced off.

Sewage disposal systems shall not be installed in wet or frozen soil.

All required Erosion & Sediment Control and Storm Water Pollution Prevention Water Quality & Quantity Control structures, permanent and temporary, are shown on the plans.

The undersigned owners of the property hereon state that they are familiar with this map, its contents and its legends and hereby consent to all said terms and conditions as stated hereon.

- Additional Notes for Residential Projects with Central Utilities -

That, no buildings are to be occupied and the new water system shall not be placed into service, until a "Completed Works Approval" is issued under section 5-1.22(d) of Part 5 of the New York State Sanitary Code (10NYCRR5).

That, no buildings are to be occupied and the new wastewater collection system shall not be placed into service until, a "Certificate of Construction Compliance" is issued under section 19.7 of Article 19 of the Dutchess County Sanitary Code.

SEE DN-3 FOR SDS DETAILS

DEEP TEST RESULTS

CONDUCTED BY LRC GROUP
DEEP TESTS CONDUCTED IN FEBRUARY, 2010

HOLE #	TOTAL DEPTH	WATER DEPTH	ROCK DEPTH	SOIL DESCRIPTION
DT-1	8'-0"	N/A	N/A	0"-3" TOP SOIL 3"-8" SAND, SMALL GRAVEL
DT-2	8'-0"	N/A	N/A	0"-3" TOP SOIL 3"-5" FINE SAND AND SILT 5"-8" SAND, SMALL GRAVEL
DT-3	9'-0"	N/A	N/A	0"-6" TOP SOIL (FILL) 6"-9" SAND, NO SILT
DT-4	8'-0"	N/A	N/A	0"-8" TOP SOIL (FILL) 8"-8" FINE GRAVEL AND SAND
DT-5	9'-0"	N/A	N/A	0"-8" TOP SOIL (FILL) 8"-9" FINE SAND
DT-6	9'-0"	N/A	N/A	0"-6" TOP SOIL (FILL) 6"-8" FINE SAND
DT-7	8'-0"	8'-0"	N/A	0"-6" TOP SOIL (FILL) 6"-3" SAND WITH ROOTS 3"-6" FINE SAND 6"-8" FINE SAND (MOIST)
DT-8	10'-0"	9'-0"	N/A	0"-6" TOP SOIL (FILL) 6"-10' SAND
DT-9	7'-0"	9'-0"	N/A	0"-8" TOP SOIL (FILL) 8"-7' FINE SAND
DT-10	6'-0"	5'-6"	N/A	0"-6" TOP SOIL (FILL) 8"-6' FINE GRAVEL
DT-11	7'-0"	5'-6"	N/A	0"-8" TOP SOIL (FILL) 4"-4' FINE SAND 4'-7' FINE SAND
DT-12	7'-0"	5'-0"	N/A	0"-6" TOP SOIL (FILL) 6"-7' FINE SAND
DT-13	10'-0"	9'-0"	N/A	0"-6" TOP SOIL (FILL) 6"-8' FINE SAND 8'-10' BANKRUN GRAVEL
DT-14	10'-0"	N/A	N/A	0"-12" TOP SOIL 12"-3.5' SAND WITH TRACE FINES 3.5'-10' - BANKRUN GRAVEL
DT-15	10'-0"	N/A	N/A	0"-12" TOP SOIL 12"-6' FINE SAND 6'-10' COARSE SAND
DT-16	10'-0"	N/A	N/A	0"-12" TOP SOIL 12"-3' SILTY SAND 3'-10' SAND WITH TRACE GRAVEL
DT-17	10'-0"	N/A	N/A	0"-12" TOP SOIL 12"-10' FINE SAND
DT-18	8'-0"	7'-0"	N/A	0"-12" TOP SOIL 12"-4' FINE SAND 4'-8' BANKRUN GRAVEL

PERCOLATION TEST RESULTS

CONDUCTED BY LRC GROUP
PERCOLATION TESTS CONDUCTED IN SEPTEMBER, 2012

HOLE#	DEPTH	1ST MIN:SEC	2ND MIN:SEC	3RD MIN:SEC	4TH MIN:SEC	5TH MIN:SEC
#1	30"	1:00	1:00	1:00	1:00	N/A
#2	30"	1:00	2:00	2:00	2:00	N/A
#3	30"	2:00	2:00	2:00	2:00	N/A
#4	30"	2:00	3:00	3:00	3:00	N/A
#5	30"	1:00	2:00	2:00	2:00	N/A
#6	30"	2:00	2:00	2:00	N/A	N/A
#7	30"	3:00	3:00	3:00	4:00	N/A
#8	30"	4:00	4:00	5:00	5:00	5:00
#9	30"	4:00	5:00	5:00	5:00	N/A
#10	30"	1:00	2:00	2:00	2:00	N/A

KIRCHHOFF PROPERTIES

#	Date	Revisions
1.	06.27.14	REVISED PER NEW LAYOUT AND DESIGN
2.	08.14.14	REVISED PER NEW LAYOUT AND DESIGN
3.	09.25.14	SUBMISSION FOR SITE PLAN ENDORSEMENT
4.	10.10.14	REVISED PER TOWN COMMENTS
5.	01.23.15	REVISED PER TOWN COMMENTS
6.	03.27.15	REVISED PER TOWN COMMENTS
7.	06.05.15	REVISED PER TOWN COMMENTS

STATE OF NEW YORK · RODNEY E. MORRISON · 074584 · LICENSED PROFESSIONAL ENGINEER

LRC GROUP
- Land Planning
- Civil Engineering
- Environmental Services
- Land Surveying
- Landscape Architecture

85 Civic Center Plaza, Suite 103
Poughkeepsie NY 12601
Tel:845.243.2880
Fax:845.265.8175

160 West Street, Suite E
Cromwell, CT 06416
Tel:860.635.2877 Fax:860.635.4226
www.lrcconsult.com

Land Resource Consultants, Inc.
LRC Engineering & Surveying, P.C.
LRC Environmental Services, Inc.
LRC Engineering and Surveying, LLC

SDS DESIGN PLAN

HOFFMAN PROPERTY

OLD FARM ROAD
TOWN OF RED HOOK
DUTCHESS COUNTY NEW YORK

Designed	SMC	CAD File	SDS12126301
Drawn	SMC	Project No.	12-1263
Checked	KFC	Date	01.16.13
Approved	REM	Scale	VARIES

SDS-1

K:\Jobs\2012 JOBS\12-1263_Kirchhoff_Hoffman Farm\GRDS\SDS12126301.dwg
Layout: SDS-1 Date: Jan 16, 2013

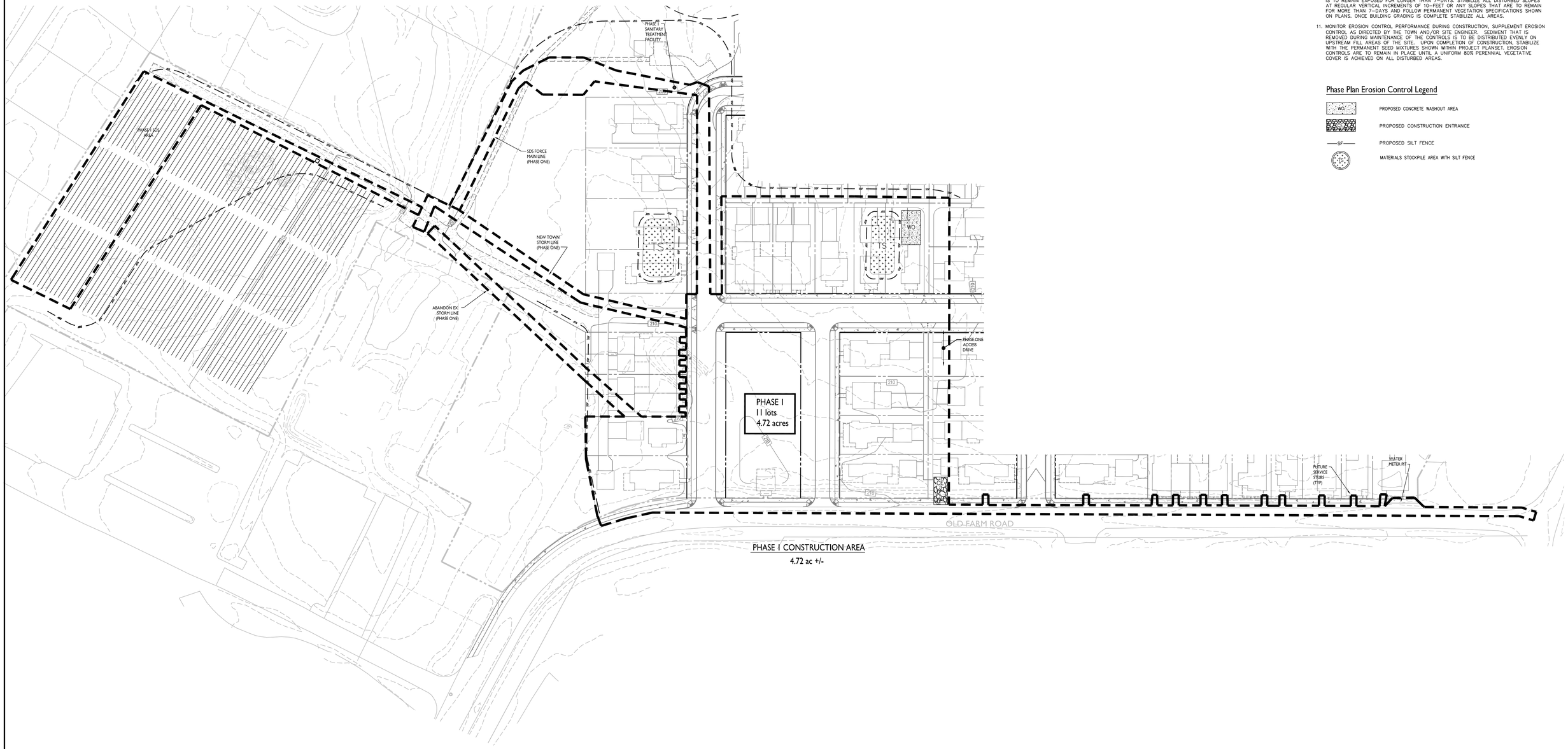

General Phase I Sequencing and Notes:

1. CLEARLY HAVE THE LIMITS OF THE CURRENT PHASE DELINEATED WITH ORANGE CONSTRUCTION FENCING, SO NO DISTURBANCE OCCURS OUTSIDE OF WORK AREA.
2. INSTALL ALL EROSION CONTROL MEASURES PERTAINING TO THE CURRENT PHASE BEFORE ANY LAND DISTURBANCE BEGINS.
3. INSTALL THE NEW TOWN STORM DRAINAGE LINE.
4. ONCE THE NEW DRAINAGE LINE HAS BEEN COMPLETED REMOVE EXISTING DRAINAGE LINE.
5. INSTALL WATER LINE AND METER ALONG OLD FARM ROAD.
6. INSTALL SDS BEDS, PUMP CHAMBER, FLOW SPLITTER, SANITARY FORCE MAIN, SEPTIC TANKS AND SANITARY MANHOLES AND NEW SANITARY MAIN PER THE PLANS.
7. INSTALL AND CAP UTILITY STUBS FOR SEWER AND WATER FOR THE INDIVIDUAL LOTS.
8. CONSTRUCT THE ACCESS DRIVE.
9. CONSTRUCT HOMES ASSOCIATED WITH THE PHASE.
10. STABILIZE ANY MATERIAL EXCAVATION AREAS WITH A TEMPORARY SEEDING MIXTURE IF IT IS TO REMAIN EXPOSED FOR LONGER THAN 7-DAYS. STABILIZE ALL DISTURBED SLOPES AT REGULAR VERTICAL INCREMENTS OF 10-FEET OR ANY SLOPES THAT ARE TO REMAIN FOR MORE THAN 7-DAYS AND FOLLOW PERMANENT VEGETATION SPECIFICATIONS SHOWN ON PLANS. ONCE BUILDING GRADING IS COMPLETE STABILIZE ALL AREAS.
11. MONITOR EROSION CONTROL PERFORMANCE DURING CONSTRUCTION, SUPPLEMENT EROSION CONTROL AS DIRECTED BY THE TOWN AND/OR SITE ENGINEER. SEDIMENT THAT IS REMOVED DURING MAINTENANCE OF THE CONTROLS IS TO BE DISTRIBUTED EVENLY ON UPSTREAM FILL AREAS OF THE SITE. UPON COMPLETION OF CONSTRUCTION, STABILIZE WITH THE PERMANENT SEED MIXTURES SHOWN WITHIN PROJECT PLANSET. EROSION CONTROLS ARE TO REMAIN IN PLACE UNTIL A UNIFORM 80% PERENNIAL VEGETATIVE COVER IS ACHIEVED ON ALL DISTURBED AREAS.

Phase Plan Erosion Control Legend

- WO — PROPOSED CONCRETE WASHOUT AREA
- PROPOSED CONSTRUCTION ENTRANCE
- SF — PROPOSED SILT FENCE
- TS — MATERIALS STOCKPILE AREA WITH SILT FENCE

SEE EROSION CONTROL DETAILS PLAN SHEET 28 OF 28 FOR INSTALLATION NOTES AND MATERIAL DETAILS.

PHASING SUMMARY

Phase	# of Lots	TND House		TND Townhouse		TND Cottage		T/C Comb.	Total Units
1	11	5	45%	4	36%	2	18%	55%	11
2	10	8	62%	0	19%	2	19%	38%	21
3	12	1	42%	8	36%	3	21%	58%	33
4	11	5	43%	4	36%	2	20%	57%	44
5	10	9	52%	0	30%	1	19%	48%	54
6	19	10	52%	0	22%	9	26%	48%	73
7	12	12	59%	0	19%	0	22%	41%	85
8	17	12	61%	4	20%	1	20%	39%	102
Totals	**102**	**62**	**61%**	**20**	**20%**	**20**	**20%**	**39%**	**102**

GRAPHIC SCALE
50 25 0 50
SCALE IN FEET

#	Date	Revisions
1	06.27.14	REVISED PER NEW LAYOUT AND DESIGN
2	09.25.14	REVISED PER NEW LAYOUT AND DESIGN
3	10.25.14	SUBMISSION FOR SKETCH ENDORSEMENT
4	10.10.14	REVISED PER TOWN COMMENTS
5	01.23.15	REVISED PER TOWN COMMENTS
6	03.27.15	REVISED PER TOWN COMMENTS
7	06.05.15	REVISED PER TOWN COMMENTS

STATE OF NEW YORK
ROGER E. MORROW
087434
LICENSED PROFESSIONAL ENGINEER

LRC GROUP
- Land Planning
- Civil Engineering
- Environmental Services
- Land Surveying
- Landscape Architecture

85 Civic Center Plaza, Suite 103
Poughkeepsie NY 12601
Tel:845.243.2880
Fax:845.265.8175

160 West Street, Suite E
Cromwell, CT 06416
Tel:860.635.2877 Fax:860.635.4226
www.lrcconsult.com

Land Resource Consultants, Inc.
LRC Engineering & Surveying, P.C.
LRC Environmental Services, Inc.
LRC Engineering and Surveying, LLC

KIRCHHOFF PROPERTIES

PHASING PLAN / EROSION CONTROL PLAN PHASE I

HOFFMAN PROPERTY

OLD FARM ROAD
TOWN OF RED HOOK
DUTCHESS COUNTY NEW YORK

Designed	SMC	CAD File	OP12126301_ph1
Drawn	SMC	Project No.	12-1263
Checked	KFC	Date	01.16.13
Approved	REM	Scale	1"=50'

OP-1

Sheet 14 of 28

P:\Jobs\Jobs 2012\12-1263_Kirchhoff_Hoffman Farm\DWGS\OP12126301_ph1.dwg
Layout: OP-1 Added: Jan 16, 2013, 10:41am by: Steve Cole

Phase Plan Erosion Control Legend

WO	PROPOSED CONCRETE WASHOUT AREA
	PROPOSED CONSTRUCTION ENTRANCE
SF	PROPOSED SILT FENCE
TS	MATERIALS STOCKPILE AREA WITH SILT FENCE

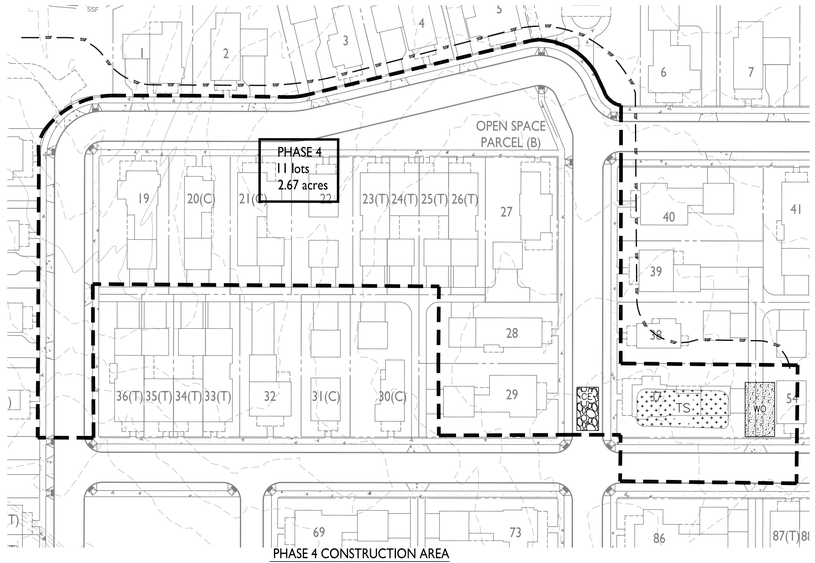

PHASE 4 CONSTRUCTION AREA

PHASE 4= 2.67 ACRES

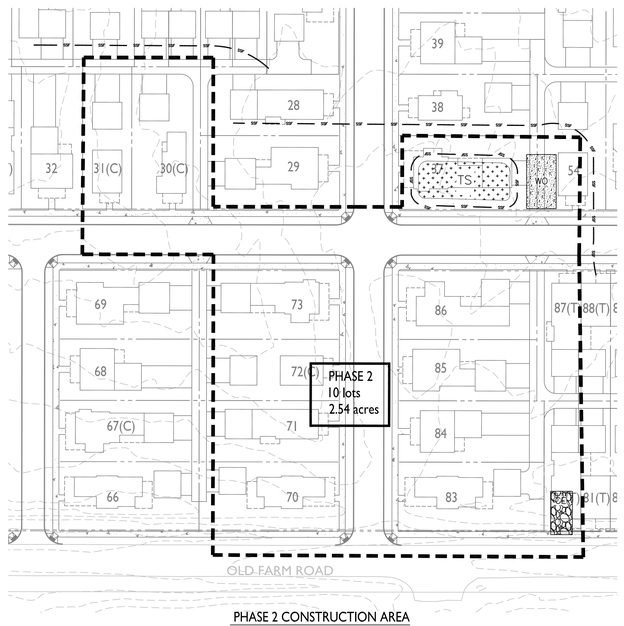

PHASE 2 CONSTRUCTION AREA

PHASE 2= 2.54 ACRES

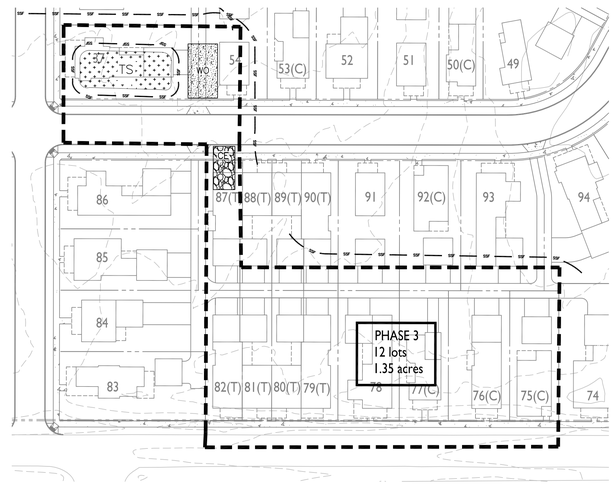

PHASE 3 CONSTRUCTION AREA

PHASE 3= 1.35 ACRES

PHASING SUMMARY

Phase	# of Lots	TND House		TND Townhouse		TND Cottage		T/C Comb.	Total Units
1	11	5	45%	4	36%	2	18%	55%	11
2	10	8	62%	0	19%	2	19%	38%	21
3	12	1	42%	8	36%	3	21%	58%	33
4	11	5	43%	4	36%	2	20%	57%	44
5	10	9	52%	0	30%	1	19%	48%	54
6	19	10	52%	0	22%	9	26%	48%	73
7	12	12	59%	0	19%	0	22%	41%	85
8	17	12	61%	4	20%	1	20%	39%	102
Totals	**102**	**62**	**61%**	**20**	**20%**	**20**	**20%**	**39%**	**102**

GRAPHIC SCALE

50 25 0 50

SCALE IN FEET

KIRCHHOFF PROPERTIES

#	Date	
1.	06.27.14	REVISED PER NEW LAYOUT AND DESIGN
2.	09.05.14	REVISED PER NEW LAYOUT AND DESIGN
3.	09.25.14	SUBMISSION FOR SKETCH ENDORSEMENT
4.	10.10.14	REVISED PER TOWN COMMENTS
5.	01.23.15	REVISED PER TOWN COMMENTS
6.	03.27.15	REVISED PER TOWN COMMENTS
7.	06.05.15	REVISED PER TOWN COMMENTS

Revisions:

LRC GROUP

- Land Planning
- Civil Engineering
- Environmental Services
- Land Surveying
- Landscape Architecture

85 Civic Center Plaza, Suite 103
Poughkeepsie NY 12601
Tel:845.243.2880
Fax:845.265.8175

160 West Street, Suite E
Cromwell, CT 06416
Tel:860.635.2877 Fax:860.635.4226
www.lrcconsult.com

Land Resource Consultants, Inc.
LRC Engineering & Surveying, P.C.
LRC Environmental Services, Inc.
LRC Engineering and Surveying, LLC

PHASING PLAN / EROSION CONTROL PLAN PHASES 2,3&4

HOFFMAN PROPERTY

OLD FARM ROAD
TOWN OF RED HOOK
DUTCHESS COUNTY NEW YORK

Designed	SMC	CAD File	OP12126301_ph234
Drawn	SMC	Project No.	12-1263
Checked	KFC	Date	01.16.13
Approved	REM	Scale	1"=50'

OP-2

J:\Jobs\Jobs_2012\12-1263_Kirchhoff_Hoffman Farm\DWGS\OP12126301_ph234.dwg
Layout: OP1_phase234

PHASE 5 CONSTRUCTION AREA

1.94 ac +/-

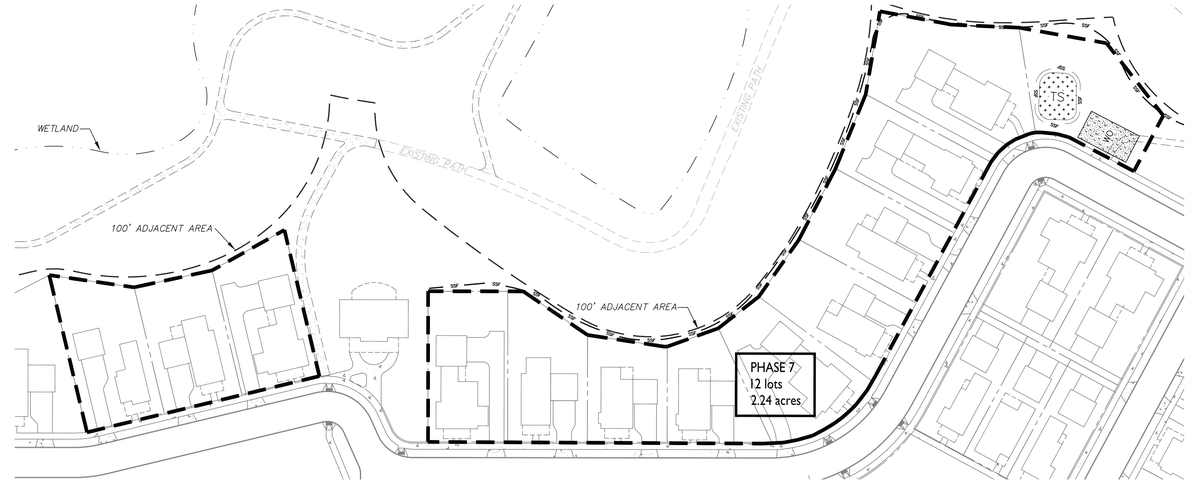

PHASE 7 CONSTRUCTION AREA

2.24 ac +/-

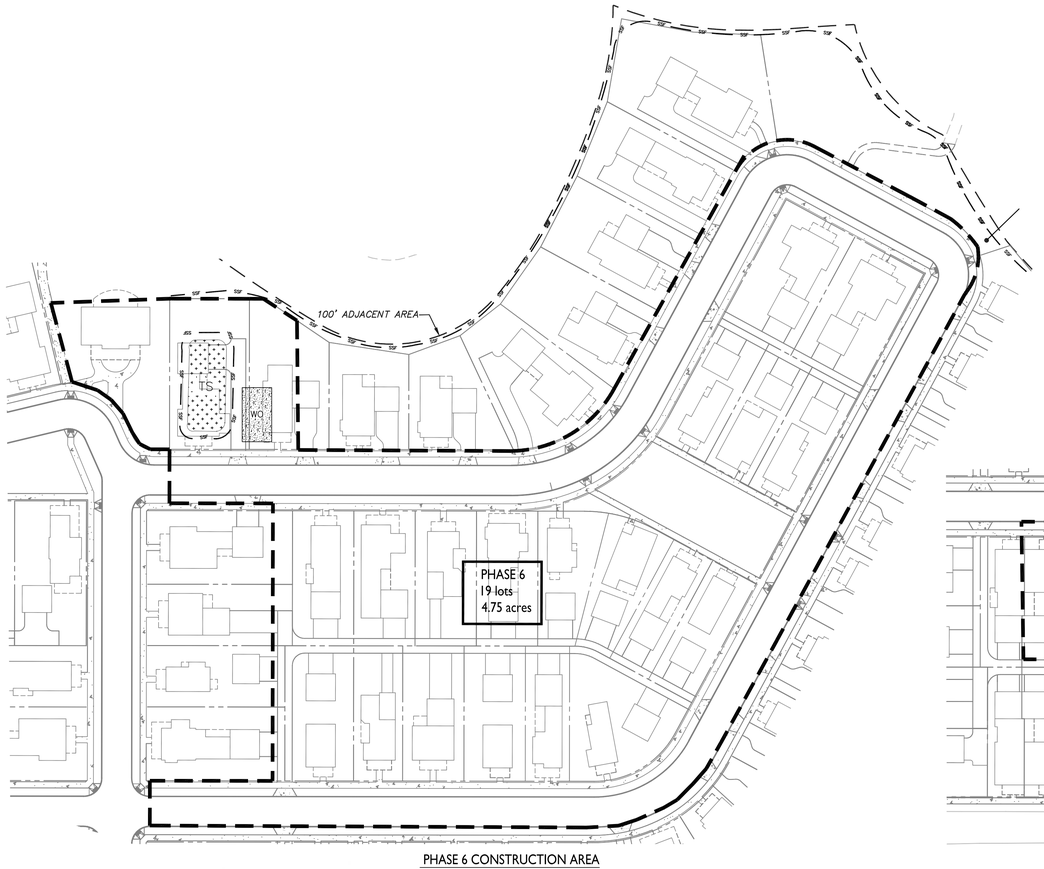

PHASE 6 CONSTRUCTION AREA

4.75 ac +/-

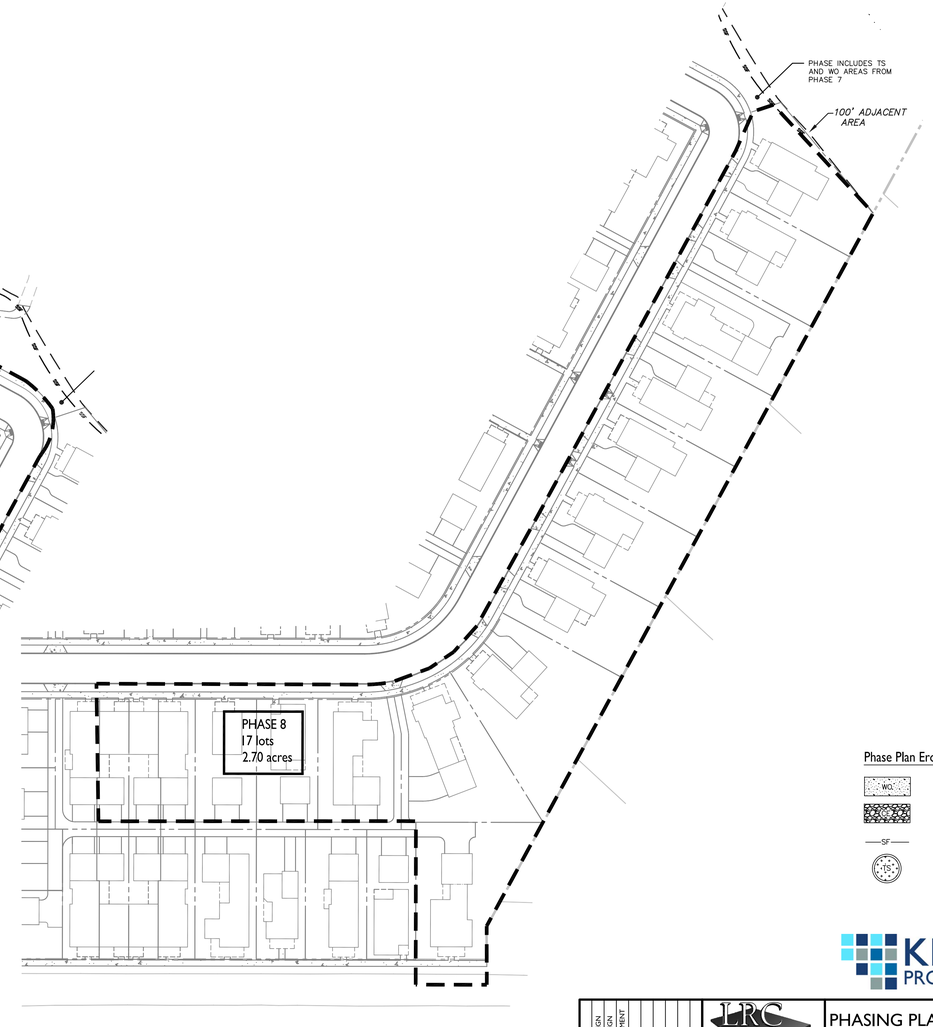

PHASE 8 CONSTRUCTION AREA

2.70 ac +/-

Phase Plan Erosion Control Legend

- WO — PROPOSED CONCRETE WASHOUT AREA
- PROPOSED CONSTRUCTION ENTRANCE
- —SF— PROPOSED SILT FENCE
- TS — MATERIALS STOCKPILE AREA WITH SILT FENCE

PHASING SUMMARY

Phase	# of Lots	TND House		TND Townhouse		TND Cottage		T/C Comb.	Total Units
1	11	5	45%	4	36%	2	18%	55%	11
2	10	8	62%	0	19%	2	19%	38%	21
3	12	1	42%	8	36%	3	21%	58%	33
4	11	5	43%	4	36%	2	20%	57%	44
5	10	9	52%	0	30%	1	19%	48%	54
6	19	10	52%	0	22%	9	26%	48%	73
7	12	12	59%	0	19%	0	22%	41%	85
8	17	12	61%	4	20%	1	20%	39%	102
Totals	**102**	**62**	**61%**	**20**	**20%**	**20**	**20%**	**39%**	**102**

GRAPHIC SCALE

50 25 0 50

SCALE IN FEET

Revisions:	Date	
1.	06.27.14	REVISED PER NEW LAYOUT AND DESIGN
2.	08.08.14	REVISED PER NEW LAYOUT AND DESIGN
3.	09.26.14	SUBMISSION FOR SKETCH LANDDEVELOPMENT
4.	10.10.14	REVISED PER TOWN COMMENTS
5.	01.23.15	REVISED PER TOWN COMMENTS
6.	03.27.15	REVISED PER TOWN COMMENTS
7.	06.05.15	REVISED PER TOWN COMMENTS

STATE OF NEW YORK — ROBERT E. MORANDO — 067,638 — LICENSED PROFESSIONAL ENGINEER

LRC GROUP

- Land Planning
- Civil Engineering
- Environmental Services
- Land Surveying
- Landscape Architecture

85 Civic Center Plaza, Suite 103
Poughkeepsie NY 12601
Tel:845.243.2880
Fax:845.265.8175

160 West Street, Suite E
Cromwell, CT 06416
Tel:860.635.2877 Fax:860.635.4226
www.lrcconsult.com

Land Resource Consultants, Inc.
LRC Engineering & Surveying, P.C.
LRC Environmental Services, Inc.
LRC Engineering and Surveying, LLC

PHASING PLAN / EROSION CONTROL PLAN PHASES 5 THRU 8

HOFFMAN PROPERTY

OLD FARM ROAD
TOWN OF RED HOOK
DUTCHESS COUNTY NEW YORK

KIRCHHOFF PROPERTIES

Designed	SMC	CAD File	OP3_phase5678
Drawn	SMC	Project No.	12-1263
Checked	KFC	Date	01.16.13
Approved	REM	Scale	1"=50'

OP-3

Sheet 16 of 28

Z:\Jobs\Jobs 2012\12-1263_Kirchhoff_Hoffman Farm\DWGS\OP3_phase5678.dwg
Layout: Phase 5 Plan

NOTES:

1. SEE PP-2 FOR PROFILE INFORMATION

GRAPHIC SCALE
50 25 0 50
SCALE IN FEET

#	Date	Revisions
1.	06.27.14	REVISED PER NEW LAYOUT AND DESIGN
2.	09.05.14	REVISED PER NEW LAYOUT AND DESIGN
3.	09.25.14	SUBMISSION FOR SKETCH ENDORSEMENT
4.	10.10.14	REVISED PER TOWN COMMENTS
5.	01.23.15	REVISED PER TOWN COMMENTS
6.	03.27.15	REVISED PER TOWN COMMENTS
7.	06.05.15	REVISED PER TOWN COMMENTS

LRC GROUP
- Land Planning
- Civil Engineering
- Environmental Services
- Land Surveying
- Landscape Architecture

85 Civic Center Plaza, Suite 103
Poughkeepsie NY 12601
Tel:845.243.2880
Fax:845.265.8175

160 West Street, Suite E
Cromwell, CT 06416
Tel:860.635.2877 Fax:860.635.4226
www.lrcconsult.com

Land Resource Consultants, Inc
LRC Engineering & Surveying, P.C.
LRC Environmental Services, Inc.
LRC Engineering and Surveying, LLC

KIRCHHOFF PROPERTIES

ROAD PLAN

HOFFMAN PROPERTY

OLD FARM ROAD
TOWN OF RED HOOK
DUTCHESS COUNTY NEW YORK

Designed	SMC	CAD File	PP12126301	PP-1	
Drawn	SMC	Project No.	12-1263		
Checked	KFC	Date	01.16.13		
Approved	REM	Scale	1"=50'		Sheet 17 of 28

X:\Jobs\Jobs 2012\12-1263_Kirchhoff_Hoffman Farm\DWGS\PP12126301.dwg
Layout: PLAN NEW 30X42

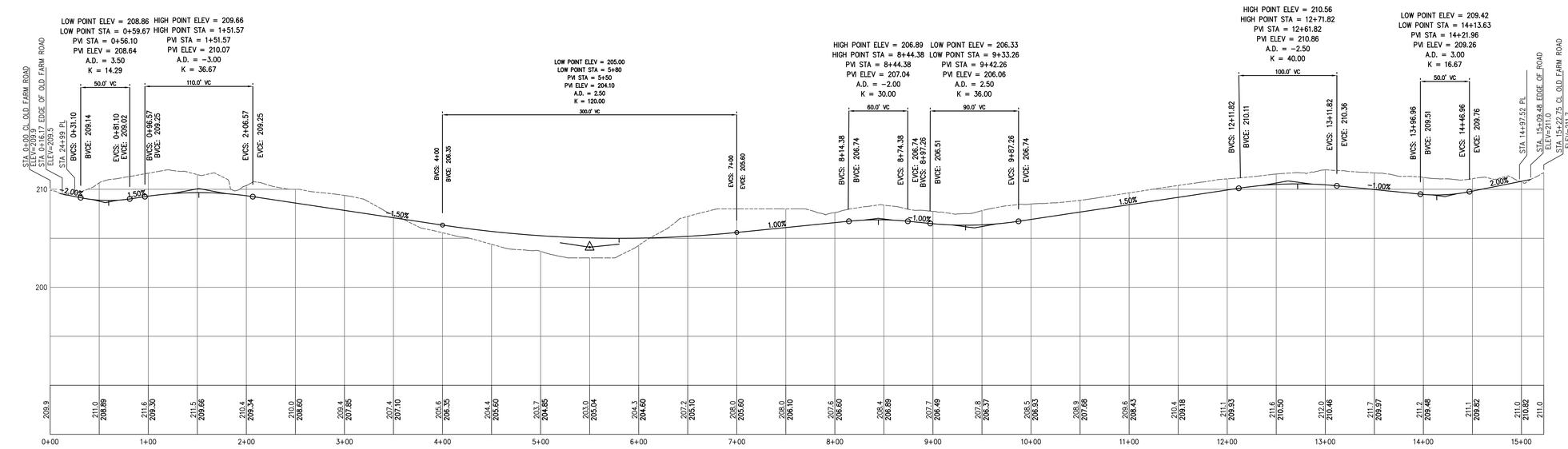

PROFILE ROAD 1

HORIZONTAL SCALE:1"=50'
VERTICAL SCALE:1"=5'

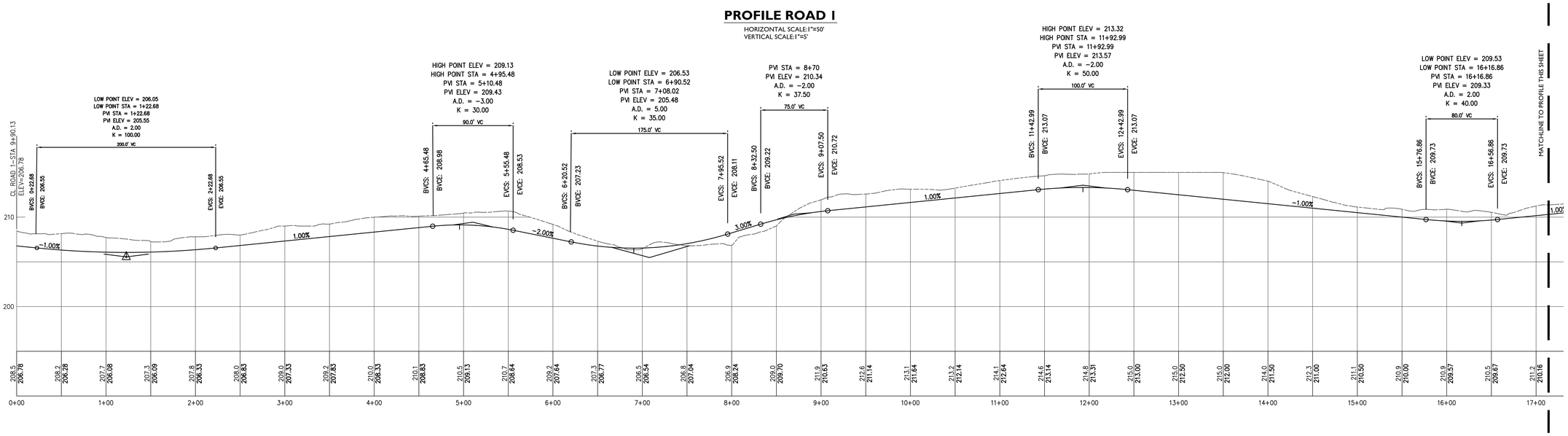

PROFILE ROAD 2

HORIZONTAL SCALE:1"=50'
VERTICAL SCALE:1"=5'

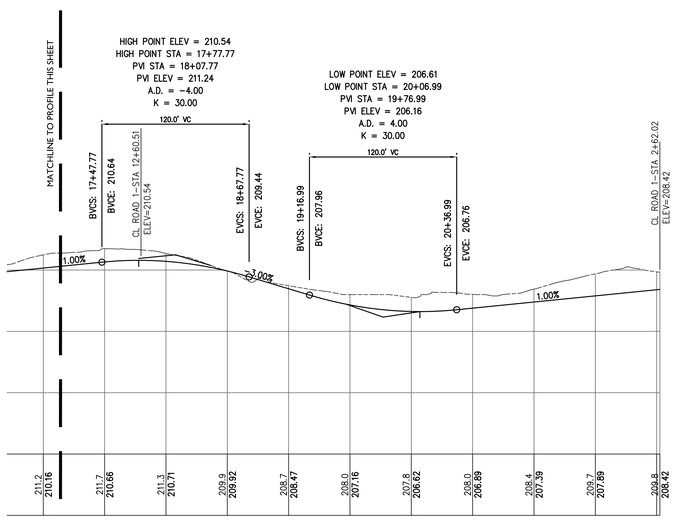

PROFILE ROAD 2-CON'D

HORIZONTAL SCALE:1"=50'
VERTICAL SCALE:1"=5'

SEE PP-1 FOR PLAN VIEW

GRAPHIC SCALE
50 25 0 50
SCALE IN FEET

KIRCHHOFF PROPERTIES

#	Date	Revisions
1	06.27.14	REVISED PER NEW LAYOUT AND DESIGN
2	09.05.14	REVISED PER NEW LAYOUT AND DESIGN
3	09.25.14	SUBMISSION FOR SKETCH ENDORSEMENT
4	10.10.14	REVISED PER TOWN COMMENTS
5	01.23.15	REVISED PER TOWN COMMENTS
6	03.27.15	REVISED PER TOWN COMMENTS
7	06.04.15	REVISED PER TOWN COMMENTS

LRC GROUP
- Land Planning
- Civil Engineering
- Environmental Services
- Land Surveying
- Landscape Architecture

55 Civic Center Plaza, Suite 103
Poughkeepsie NY 12601
Tel:845.243.2880
Fax:845.265.8175

160 West Street, Suite E
Cromwell, CT 06416
Tel:860.635.2877 Fax:860.635.4226
www.lrcconsult.com

Land Resource Consultants, Inc.
LRC Engineering & Surveying, P.C.
LRC Environmental Services, Inc.
LRC Engineering and Surveying, LLC

STATE OF NEW YORK · RODNEY E. HORTSHOFF · LICENSED PROFESSIONAL ENGINEER · 074304

ROAD PROFILE PLAN

HOFFMAN PROPERTY

OLD FARM ROAD
TOWN OF RED HOOK
DUTCHESS COUNTY NEW YORK

Designed	SMC	CAD File	PP12126302
Drawn	SMC	Project No.	12-1263
Checked	KFC	Date	01.16.13
Approved	REH	Scale	1"=50'

PP-2

Sheet 18 of 28

X:\Jobs\Jobs 2012\12-1263_Kirchhoff_Hoffman Farm\DWGS\PP12126302.dwg
Layout: PROFILE SHEET

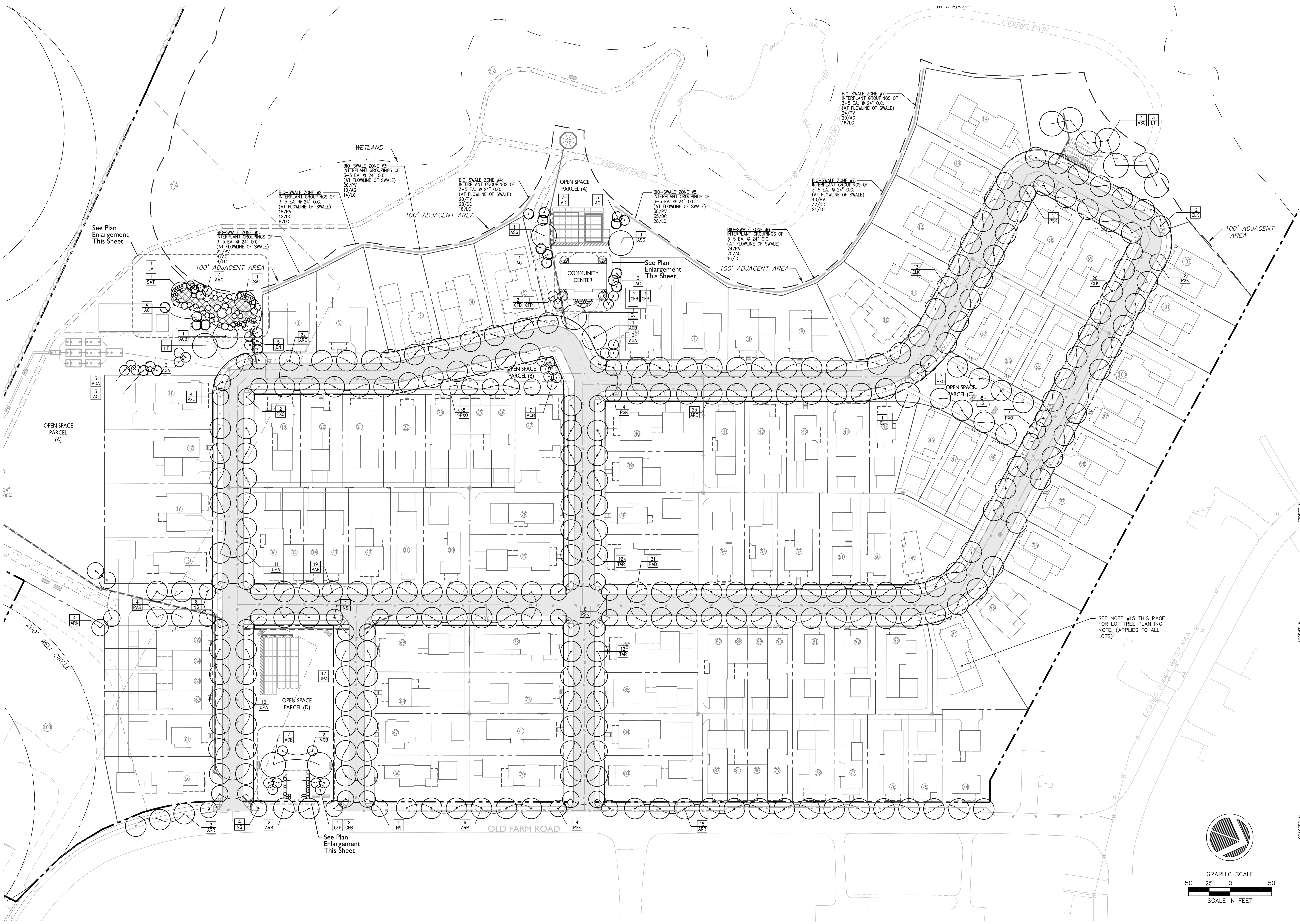

Planting Notes:

1. THE LANDSCAPE PLAN AND DETAIL SHEET ARE FOR LANDSCAPING INFORMATION ONLY. PLEASE REFER TO THE SITE LAYOUT PLAN, LIGHTING PLAN, GRADING PLAN AND UTILITIES PLAN FOR ALL OTHER INFORMATION.
2. THE CONTRACTOR SHALL GUARANTEE THAT ALL PLANTS, TREES, AND SHRUBS SHALL BE HEALTHY AND FREE OF DISEASE FOR A PERIOD OF ONE YEAR AFTER SUBSTANTIAL COMPLETION AND ACCEPTANCE BY OWNER OR LANDSCAPE ARCHITECT. CONTRACTOR SHALL REPLACE ANY DEAD OR UNHEALTHY PLANTS AT CONTRACTOR'S EXPENSE. PLANT MATERIAL REPLACEMENTS SHALL BE GUARANTEED FOR ONE FULL YEAR FROM DATE OF REPLACEMENT. FINAL ACCEPTANCE SHALL BE MADE IF ALL PLANTS MEET THE GUARANTEE REQUIREMENTS INCLUDING MAINTENANCE. MAINTENANCE RESPONSIBILITIES INCLUDE CULTIVATING, SPRAYING, WEEDING, WATERING, TIGHTENING GUYS, PRUNING, FERTILIZING, MULCHING, AND ANY OTHER OPERATIONS NECESSARY TO MAINTAIN PLANT VIABILITY. MAINTENANCE SHALL BEGIN IMMEDIATELY AFTER PLANTING AND CONTINUE UNTIL THE END OF THE ONE YEAR GUARANTEE PERIOD.
3. THE CONTRACTOR SHALL SUPPLY ALL LABOR, PLANTS, AND MATERIALS IN QUANTITIES SUFFICIENT TO COMPLETE THE WORK SHOWN ON THE DRAWINGS AND LISTED IN THE PLANT SCHEDULE. IN THE EVENT OF A DISCREPANCY BETWEEN QUANTITIES SHOWN IN THE PLANT SCHEDULE AND THOSE REQUIRED BY THE DRAWINGS, THE LARGER SHALL APPLY.
4. ALL SHRUB MASSINGS SHALL BE MULCHED TO A DEPTH OF 3". ANNUAL AND PERENNIAL BEDS SHALL BE MULCHED TO A DEPTH OF 2" WITH SHREDDED HARDWOOD BARK MULCH.
5. NO PLANT SHALL BE PLACED IN THE GROUND BEFORE ROUGH GRADING HAS BEEN COMPLETED AND APPROVED BY ENGINEER. STAKING THE LOCATION OF ALL TREES AND SHRUBS SHALL BE COMPLETED PRIOR TO PLANTING FOR APPROVAL BY THE OWNER OR LANDSCAPE ARCHITECT. STAKING OF THE INSTALLED TREE MUST BE COMPLETED THE SAME DAY AS IT IS INSTALLED. ALL TREES SHALL BE STAKED OR GUYED PER DETAIL. SEE SHEET L2.1 FOR PLANTING DETAILS.
6. COORDINATE PLANT MATERIAL LOCATIONS WITH SITE UTILITIES. SEE SITE LAYOUT, GRADING AND UTILITY DRAWINGS FOR STORM, SANITARY AND WATER LINES. SEE LIGHTING PLAN FOR ELECTRICAL AND LIGHTING LAYOUT AND DETAILS. UTILITY LOCATIONS ARE APPROXIMATE. EXERCISE CARE WHEN DIGGING IN AREAS OF POTENTIAL CONFLICT WITH UNDERGROUND OR OVERHEAD UTILITIES. THE CONTRACTOR IS RESPONSIBLE FOR ANY DAMAGE DUE TO CONTRACTOR'S NEGLIGENCE AND SHALL REPLACE OR REPAIR ANY DAMAGE AT CONTRACTOR'S EXPENSE.
7. LANDSCAPE PLANTING PITS MUST BE FREE DRAINING. PAVEMENT, COMPACTED SUBGRADE, AND BLASTED ROCK SHALL BE REMOVED FROM WITHIN TRAFFIC ISLANDS TO BE LANDSCAPED TO A DEPTH OF 2' OR TO A GREATER DEPTH IF REQUIRED BY PLANTING DETAILS OR SPECIFICATIONS. REPLACE SOIL WITHIN ISLANDS WITH MODERATELY COMPACTED LOAM OR SANDY LOAM FREE FROM STONES AND RUBBISH 1" OR GREATER IN DIAMETER AND ANY OTHER MATERIAL HARMFUL TO PLANT GROWTH AND DEVELOPMENT. PLANTING INSTALLATION WITHIN ISLANDS SHALL BE AS DETAILED AND CONTAIN PLANTING MIX AS SPECIFIED.
8. PLANTING SOIL MIXTURE FOR TREES AND SHRUBS:
   - 1 PART PEAT MOSS
   - 3 PARTS TOPSOIL
   - FERTILIZER/LIME (APPLY AS RECOMMENDED BY SOIL ANALYSIS)
   - MYCORHIZA INOCULANT – "TRANSPLANT 1-STEP" AS MANUFACTURED BY ROOTS, INC. OR APPROVED EQUAL. USE PER MANUFACTURER'S RECOMMENDATIONS FOR TREES AND SHRUBS.
9. PLANTING SOIL MIXTURE FOR PERENNIAL AND ORNAMENTAL GRASS BEDS:
   - 1 PART PEAT MOSS
   - 1 PART MANURE (WEED FREE)
   - 3 PARTS TOPSOIL
   - FERTILIZER/LIME (APPLY AS RECOMMENDED BY SOIL ANAYLSIS)
   - MILORGANITE APPLIED AT 5 LBS. PER 100 S.F.
10. TIME OF PLANTING: NEW PLANT MATERIALS SHALL BE INSTALLED BETWEEN APRIL 1 AND JUNE 15, OR AFTER SEPTEMBER 15TH AND NO LATER THAN OCTOBER 31ST.
11. TOPSOIL SHALL BE INSTALLED AT A MINIMUM DEPTH OF 6". CONTRACTOR SHALL SUBMIT TOPSOIL TO A CERTIFIED TESTING LABORATORY TO DETERMINE pH, FERTILITY, ORGANIC CONTENT AND MECHANICAL COMPOSITION. THE CONTRACTOR SHALL SUBMIT THE TEST RESULTS FROM REGIONAL EXTENSION OFFICE OF USDA TO THE OWNER OR LANDSCAPE ARCHITECT FOR REVIEW AND APPROVAL. CONTRACTOR SHALL INCORPORATE AMENDMENTS FOR GOOD PLANT GROWTH AND PROPER SOIL ACIDITY RECOMMENDED FROM THE TOPSOIL TEST.
12. LAWN SEEDING MIXTURE:

    15% KENTUCKY BLUEGRASS (POA PRATENSIS – SINGLE VARIETY)
    15% PERENNIAL RYEGRASS (LOLIUM PERENNE)
    30% CREEPING RED FESCUE (FESTUCA RUBRA "SHADEMASTER II")
    25% CHEWINGS FESCUE (FESCTUCA RUBRA "JAMESTOWN II")
    15% HARD FESCUE (FESTUCA OVINA "RELIANT II")

    SEEDING RATE: 4.5 LBS PER 1,000 S.F. (ADD 10% TO QUANTITY IF HYDROSEEDED).
    SEEDING DATES: AUGUST 15 – OCTOBER 1 AND APRIL 15 – JUNE 15 UNLESS OTHERWISE APPROVED BY THE OWNER OR LANDSCAPE ARCHITECT.
13. ALL SLOPES GREATER THAN 3:1 RECEIVING A GRASS SEEDING MIXTURE SHALL BE COVERED WITH AN EROSION CONTROL BLANKET.
14. ALL DISTURBED AREAS NOT OTHERWISE DEVELOPED SHALL BE SEEDED WITH THE LAWN SEEDING MIXTURE.
15. PLOT PLAN DRAWINGS FOR EACH LOT WILL INCLUDE A PLANTING PLAN AND THIS PLAN WILL INCLUDE AT MINIMUIM ONE FRONT YARD TREE, SPECIES SIMILAR TO (BUT NOT LIMITED TO) THIS LIST:
    - TREE LILAC (SYRINGA RETICULATA)
    - WHITE HOUSE PEAR (PYRUS CALLERYANA 'WHITE HOUSE')
    - ALLEGHENY SERVICEBERRY (AMELANCHIER LAEVIS)
    - JAPANESE STEWARTIA (STEWARTIA PSUEDOCAMELLIA)
    - THUNDERCLOUD PLUM (PRUNUS CER. 'THUNDERCLOUD)

    FOR LOTS WITH LANE ACCESS, PLANTING PLAN WILL INCLUDE A REAR YARD/LANE TREE FROM THE ABOVE LIST OR LARGER TREES SUCH AS:
    - CHANTICLEER PEAR (PYRUS CALLERYANA 'CHANTICLEER')
    - RED SUNSET RED MAPLE (ACER R. 'RED SUNSET')
    - BLACK GUM (NYSSA SYLVATICA)
    - SHADEMASTER HONEYLOCUST (GLEDITSIA T. 'SHADEMASTER')

Plant List:

	CODE	QTY.	BOTANICAL NAME	COMMON NAME	ROOT	SIZE INSTALLED	SIZE MATURE	COMMENTS
STREET & PARK TREES:	AC	19	ABIES CONCOLOR	WHITE FIR	B&B	8–10' ht.	75' ht.	
	ARK	4	ACER RUBRUM 'KARPICK'	KARPICK RED MAPLE	B&B	2.5–3" cal.	20x40' ht.	Narrow oval crown
	ARO	45	ACER RUBRUM 'OCTOBER GLORY'	OCTOBER GLORY RED MAPLE	B&B	2.5–3" cal.	40' ht.	Broad oval crown
	ARR	26	ACER RUBRUM 'RED SUNSET'	RED SUNSET RED MAPLE	B&B	2.5–3" cal.	40' ht.	Upright ovcl crown
	ASG	6	ACER SACCHARUM 'GREEN MOUNTAIN'	GREEN MOUNTAIN SUGAR MAPLE	B&B	2.5–3" cal.	55' ht.	Upright oval crown
	ACB	4	AESCULUS CARNEA 'BRIOTTI'	RED HORSECHESTNUT	B&B	2.5–3" cal.	40' ht.	
	CJ	2	CERCIDIPHYLLUM JAPONICUM	KATSURA TREE	B&B	2.5–3" cal.	60' ht.	
	CLK	45	CLADRASTIS KENTUCKEA	YELLOWWOOD	B&B	2.5–3" cal.	40' ht.	
	LT	4	LIRIODENDRON TULIPIFERA	TULIP TREE	B&B	2–2.5" cal.	80' ht.	
	LS	8	LIQUIDAMBAR STYRACIFLUA	AMERICAN SWEETGUM	B&B	2.5–3" cal.	60' ht.	
	NS	20	NYSSA SYLVATICA	BLACK GUM	B&B	2.5–3" cal.	40' ht.	
	PAB	54	PLATANUS ACERIFOLIA 'BLOODGOOD'	LONDON PLANE TREE	B&B	2.5–3" cal.	50' ht.	Rounded crown
	SAT	2	SALIX ALBA 'TRISTA'	GOLDEN WEEPING WILLOW	B&B	2.5–3" cal.	60' ht.	
	TAR	25	TILIA AMERICANA 'REDMOND'	REDMOND LINDEN	B&B	2.5–3" cal.	70' ht.	
	UPA	35	ULMUS PARVIFOLIA 'ALLEE'	ALLEE LACEBARK ELM	B&B	2.5–3" cal.	35x50' ht.	
ACCENT & FLOWERING TREES:	AMC	3	AMELANCHIER CANDENSIS	SHADBLOW	B&B	6–7' ht.	25' ht.	Clump Form
	AGA	9	AMELANCHIER G. 'AUTUMN BRILLIANCE'	AUTUMN BRILLIANCE SERVICEBERRY	B&B	8–10' ht.	35' ht.	Clump Form
	BN	5	BETULA NIGRA 'HERITAGE'	HERITAGE RIVER BIRCH	B&B	8–10' ht.	40' ht.	Multi-stem; Low Branched
	CFB	6	CORNUS FLORIDA 'CHEROKEE BRAVE'	CHEROKEE BRAVE DOGWOOD	B&B	2.5–3" cal.	20–25' ht.	Pink
	CFP	6	CORNUS FLORIDA 'CHEROKEE PRINCESSS'	CHEROKEE PRINCESS DOGWOOD	B&B	2.5–3" cal.	20–25' ht.	White
	JV	3	JUNIPERUS VIRGINIANA	EASTERN RED CEDAR	B&B	6–7' ht.	40' ht.	
	MCB	9	MALUS 'CORAL BURST'	CORAL BURST CRABAPPLE	B&B	2.5–3" cal.	15' ht.	Coral-pink bloom
	PSK	20	PRUNUS SERRULATA 'KWANZAN'	KWANZAN CHERRY	B&B	2.5–3" cal.	30' ht.	
	PXO	16	PRUNUS x 'OKAME'	OKAME CHERRY	B&B	2.5–3" cal.	30' ht.	
SHRUBS:	AGR	10	AZALEA 'GIRARD'S ROSE'	GIRARD'S ROSE AZALEA	CONT.	#5	2–3' ht.	
	AGC	7	AZALEA 'GIRARD'S CRIMSON'	GIRARD'S CRIMSON AZALEA	CONT.	#5	3–4' ht.	Crimson Bloom
	AZ	10	AZALEA VISCOSUM	SWAMP AZALEA	CONT.	#7	12–15' ht.	
	CA	5	CLETHRA ALNIFOLIA	SUMMERSWEET	CONT.	#7	12–15' ht.	
	CSI	15	CORNUS SERICEA 'ISANTI'	ISANTI RED TWIG DOGWOOD	CONT.	#5	4–5' ht.	
	HSA	2	HIBISCUS SYRIACUS 'ARDENS'	ROSE OF SHARON	B&B	36–42" ht.	8–10' ht.	Double Rosy Purple
	ICS	4	ILEX CRENATA 'STEEDS'	STEEDS JAPANESE HOLLY	CONT.	#7	8–10' ht.	Upright Pyramidal Form
	IVJ	1	ILEX VERTICILLATA 'JIM DANDY'	JIM DANDY (MALE) WINTERBERRY	CONT.	#5	6–8' ht.	
	IVR	13	ILEX VERTICILLATA 'RED SPRITE'	RED SPRITE WINTERBERRY	CONT.	#5	6' ht.	
	LB	3	LINDERA BENZOIN	SPICEBUSH	CONT.	#7	8–12' ht.	
	VA	55	VACCINEUM ANGUSTIFOLIA	LOWBUSH BLUEBERY	CONT.	15–18" ht.	12" ht.x2'	
	VD	4	VIBURNUM DENTATUM	ARROWWOOD VIBURNUM	CONT.	#7	8–10' ht.	
	RK1	16	ROSA 'RADRAZZ'	KNOCK OUT ROSE	CONT.	#5	3–4' ht.	30" o.c.; Red
	RK2	6	ROSA 'RADCOR'	RAINBOW KNOCK OUT ROSE	CONT.	#5	3–4' ht.	30" o.c.; Pink
GRASSES & PERENNIALS	AG	58	ANDROPOGON GERARDII	BIG BLUESTEM	POT	#SP4	4–6' ht.	2.5' o.c.; Blue-green blades
	ADK	36	ASTER DUMOSUS 'PROF. KIPPENBURG'	PROFESSOR KIPPENBERG ASTER	CONT.	#SP4	20" ht.	18" o.c.; Lav-Blue Late Sum.
	CAE	95	CAREX ELATA	TUSSOCK SEDGE	CONT.	#SP4	2–3' ht.	Emerald Green Blades
	CAP	95	CAREX PENDULA	DROOPING SEDGE	CONT.	#SP4	2–3' ht.	Dark Green Blades
	DC	167	DESCHAMPSIA CAESPITOSA	TUFTED HAIRGRASS	POT	#SP4	3' ht.	2.5' o.c.; 30" ht. panicles
	IVC	45	IRIS VERSICOLOR	NORTHERN BLUE FLAG	POT	#SP4	36" ht.	Red-Purple
	HHR	22	HEMEROCALLIS 'HAPPY RETURNS'	HAPPY RETURNS DAYLILY	CONT.	#SP4	18" ht.	18" o.c.; YELLOW
	HRS	22	HEMMEROCALLIS 'RUBY STELLA'	RUBY STELLA DAYLILY	CONT.	#SP4	14–18" ht;	15" o.c.; Red
	HRA	16	HEMMEROCALLIS 'RUFFLED APRICOT'	RUFFLED APRICOT DAYLILY	CONT.	#SP4	28" ht.	Deep Apricot
	HSB	16	HEMMEROCALLIS 'SPELLBINDER'	SPELLBINDER DAYLILY	CONT.	#SP4	30" ht.	Bright Gold
	LC	145	LOBELIA CARDINALIS	CARDINAL FLOWER	POT	#SP4	30–36" ht.	18" O.C.
	NFB	16	NEPETA FASSENNI 'BLUE WONDER'	BLUE WONDER CATMINT	POT	#SP4	12–15"	
	PV	242	PANICUM VIRGATUM	SWITCHGRASS	POT	#SP4	4' ht.	2' o.c.; Blades; 6' Tassles

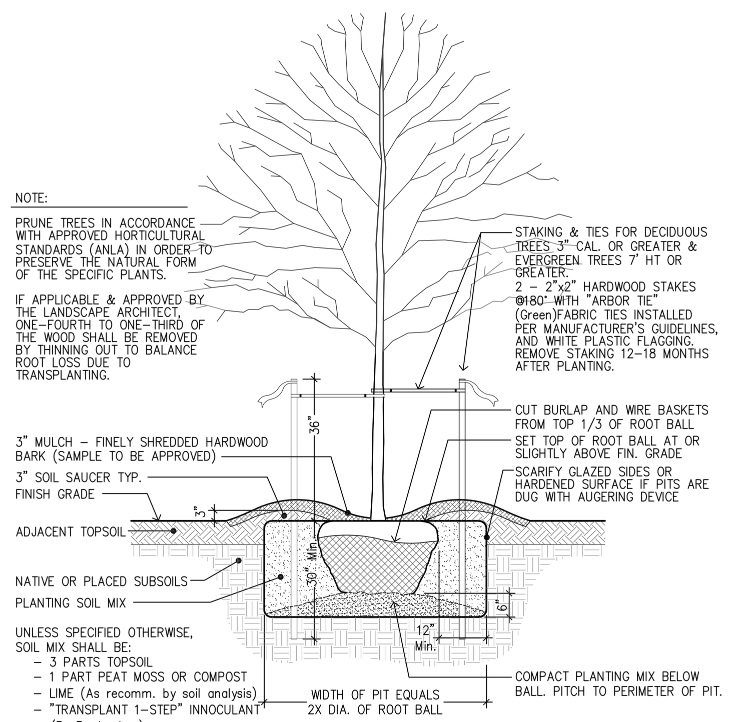

TREE PLANTING
Scale 3/8" = 1'-0"

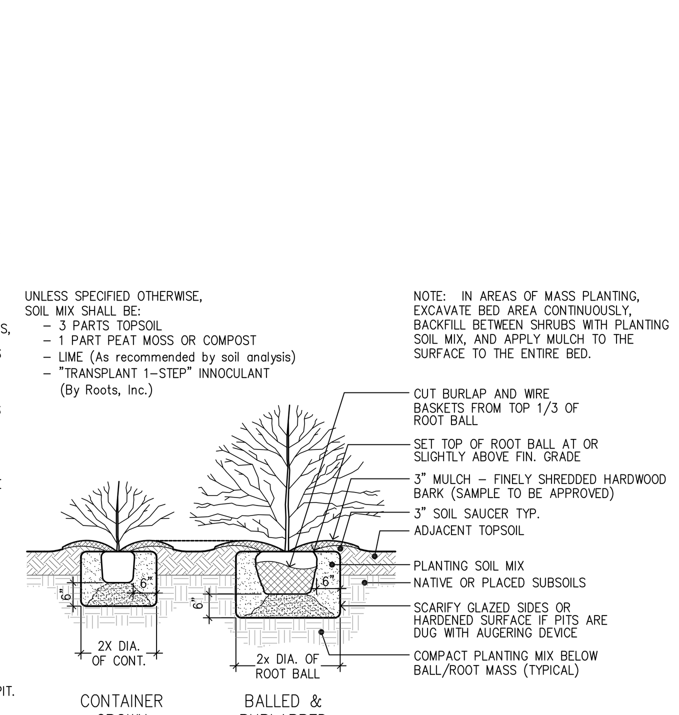

SHRUB PLANTING
Scale 3/8" = 1'-0"

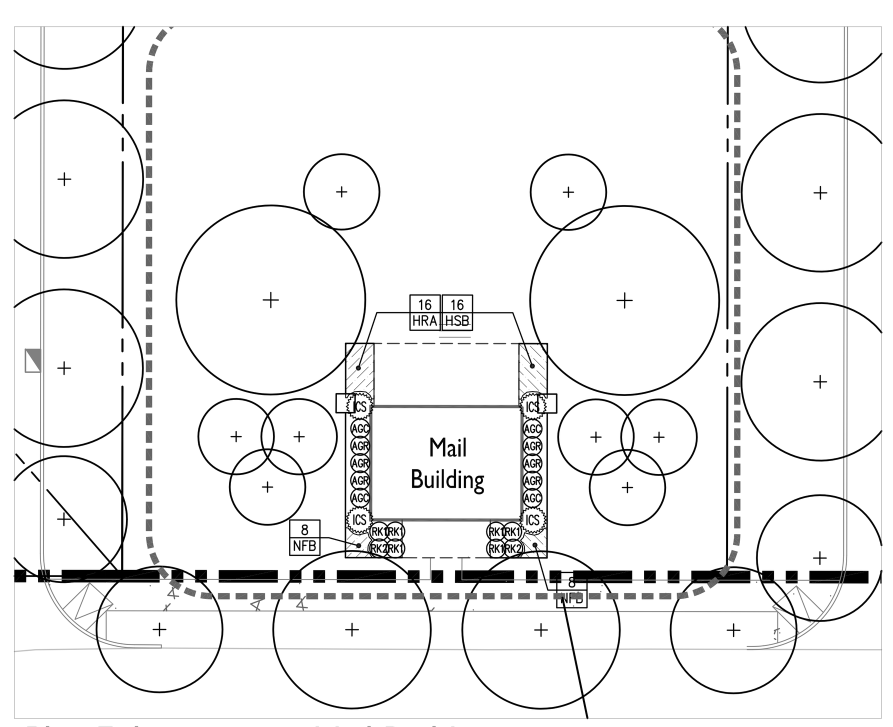

Plan Enlargement - Mail Building
Scale: 1" = 20'

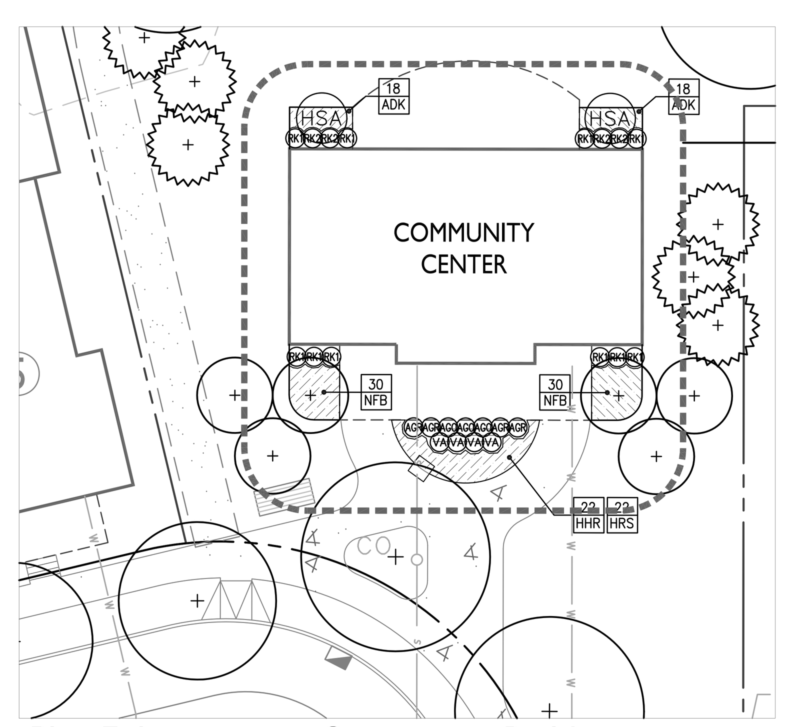

Plan Enlargement - Community Building
Scale: 1" = 20'

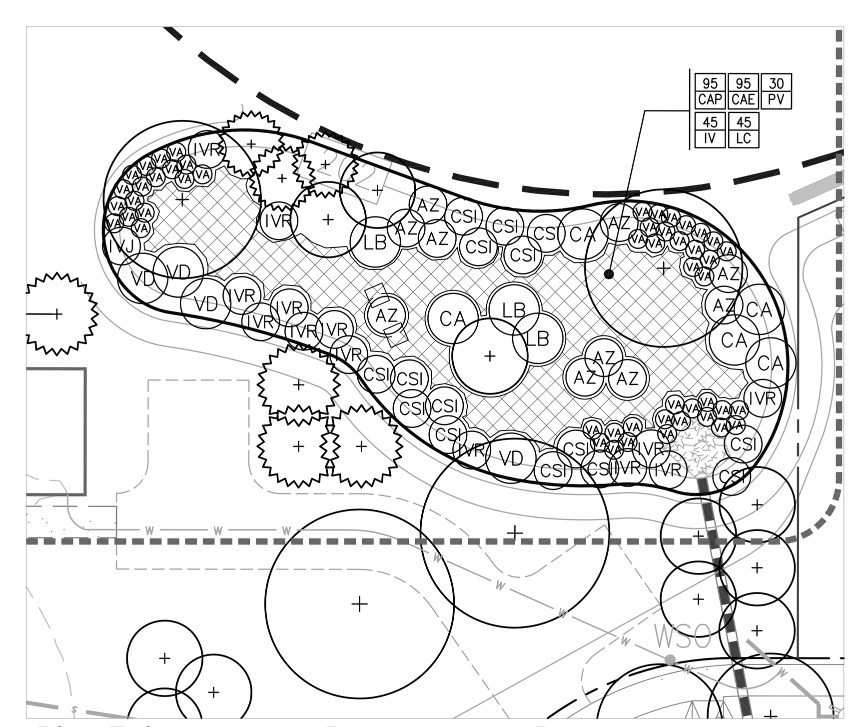

Plan Enlargement - Bio-retention Basin
Scale: 1" = 20'

KIRCHHOFF PROPERTIES

#	Date	Revisions:
1.	06.27.14	REVISED PER NEW LAYOUT AND DESIGN
2.	09.05.14	REVISED PER NEW LAYOUT AND DESIGN
3.	09.25.14	SUBMISSION FOR SKETCH ENDORESEMENT
4.	10.10.14	REVISED PER TOWN COMMENTS
5.	01.23.15	REVISED PER TOWN COMMENTS
6.	03.27.15	REVISED PER TOWN COMMENTS
7.	06.05.15	REVISED PER TOWN COMMENTS

LRC GROUP
- Land Planning
- Civil Engineering
- Environmental Services
- Land Surveying
- Landscape Architecture

85 Civic Center Plaza, Suite 103
Poughkeepsie NY 12601
Tel:845.243.2880
Fax:845.265.8175

160 West Street, Suite E
Cromwell, CT 06416
Tel:860.635.2877 Fax:860.635.4226
www.lrcconsult.com

Land Resource Consultants, Inc.
LRC Engineering & Surveying, P.C.
LRC Environmental Services, Inc.
LRC Engineering and Surveying, LLC

STREET TREE PLANTING PLAN

HOFFMAN PROPERTY

OLD FARM ROAD
TOWN OF RED HOOK
DUTCHESS COUNTY NEW YORK

Designed	SMC	CAD File	LL12126301
Drawn	SMC	Project No.	12-1263
Checked	KFC	Date	01.16.13
Approved	REM	Scale	1"=50'

LL-1

X:\Jobs\Jobs 2012\12-1263_Kirchhoff_Hoffman Farm\DWGS\LL12126301.dwg
Layout: LANDSCAPING PLAN 30X42

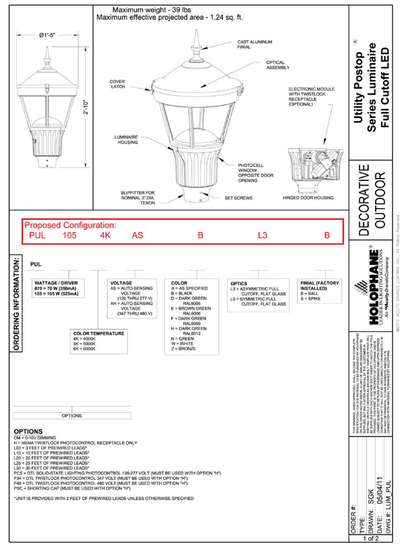

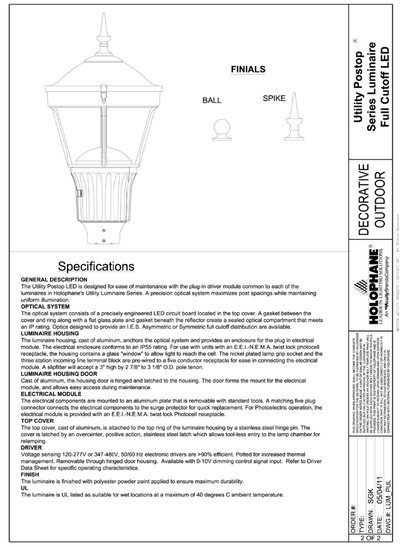

Specifications

GENERAL DESCRIPTION
The Utility Postop LED is designed for ease of maintenance with the plug-in driver module common to each of the luminaires in Holophane's Utility Luminaire Series. A precision optical system maximizes post spacings while maintaining uniform illumination.

OPTICAL SYSTEM
The optical system consists of a precisely engineered LED circuit board located in the top cover. A gasket between the cover and ring along with a flat glass plate and gasket beneath the reflector create a sealed optical compartment that meets an IP rating. Optics designed to provide an I.E.S. Asymmetric or Symmetric full cutoff distribution are available.

LUMINAIRE HOUSING
The luminaire housing, cast of aluminum, anchors the optical system and provides an enclosure for the plug in electrical module. The electrical compartment conforms to an IP55 rating. For use with units with an E.E.I.-N.E.M.A. twist lock photocell receptacle, the housing contains a glass "window" to allow light to reach the cell. The nickel plated lamp grip socket and the three-station incoming line terminal block are pre-wired to a five conductor receptacle for ease in connecting the electrical module. A slipfitter will accept a 3" high by 2 7/8" to 3 1/8" O.D. pole tenon.

LUMINAIRE HOUSING DOOR
Cast of aluminum, the housing door is hinged and latched to the housing. The door forms the mount for the electrical module, and allows easy access during maintenance.

ELECTRICAL MODULE
The electrical components are mounted to an aluminum plate that is removable with standard tools. A matching five plug connector connects the electrical components to the surge protector for quick replacement. For Photoelectric operation, the electrical module is provided with an E.E.I.-N.E.M.A. twist lock Photocell receptacle.

TOP COVER
The top cover, cast of aluminum, is attached to the top ring of the luminaire housing by a stainless steel hinge pin. The cover is latched by an overcenter, positive action, stainless steel latch which allows tool-less entry to the lamp chamber for relamping.

DRIVER
Voltage sensing 120-277V or 347-480V, 50/60 Hz electronic drivers are >90% efficient. Potted for increased thermal management. Removable through hinged door housing. Available with 0-10V dimming control signal input. Refer to Driver Data Sheet for specific operating characteristics.

FINISH
The luminaire is finished with polyester powder paint applied to ensure maximum durability.

UL
The luminaire is UL listed as suitable for wet locations at a maximum of 40 degrees C ambient temperature.

Street Lighting: Typical Pole Mounted Fixture Cut

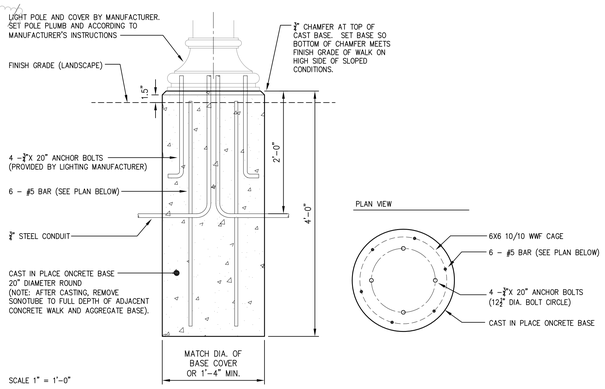

Street Lighting - Typical Pole Light Base Detail

Light Fixture Schedule

LED Lamp (70w Equivalent); Fixture lens mounted at 12' height

Schedule

Symbol	Label	Quantity	Manufacturer	Catalog Number	Description	Lamp	Number Lamps	Filename	Lumens Per Lamp	Light Loss Factor	Wattage
○	A	31	Holophane	PTUE 70 4K XX G3 X XXXX	POST TOP UTILITY LED	60 4K LED ARRAY	1	PTUE_70_4K_XX_G3_X_XXXX.ies	4511.121	0.95	67.4

Lighting Data Calculations:

Statistics

Description	Symbol	Avg	Max	Min	Max/Min	Avg/Min
Calc Zone #1	+	0.3 fc	3.6 fc	0.0 fc	N/A	N/A

KIRCHHOFF PROPERTIES

No.	Date	Revisions
1.	06.27.14	REVISED PER NEW LAYOUT AND DESIGN
2.	08.05.14	REVISED PER NEW LAYOUT AND DESIGN
3.	09.25.14	SUBMISSION FOR SKETCH ENDORSEMENT
4.	10.10.14	REVISED PER TOWN COMMENTS
5.	01.23.15	REVISED PER TOWN COMMENTS
6.	03.27.15	REVISED PER TOWN COMMENTS
7.	06.05.15	REVISED PER TOWN COMMENTS

STATE OF NEW YORK · ROBERT E. MORRISON · 074392 · LICENSED PROFESSIONAL ENGINEER

LRC GROUP
- Land Planning
- Civil Engineering
- Environmental Services
- Land Surveying
- Landscape Architecture

85 Civic Center Plaza, Suite 103
Poughkeepsie NY 12601
Tel:845.243.2880
Fax:845.265.8175

160 West Street, Suite E
Cromwell, CT 06416
Tel:860.635.2877 Fax:860.635.4226
www.lrcconsult.com

Land Resource Consultants, Inc.
LRC Engineering & Surveying, P.C.
LRC Environmental Services, Inc.
LRC Engineering and Surveying, LLC

STREET LIGHTING PLAN

HOFFMAN PROPERTY

OLD FARM ROAD
TOWN OF RED HOOK
DUTCHESS COUNTY NEW YORK

Designed	SMC	CAD File	LP12126301
Drawn	SMC	Project No.	12-1263
Checked	KFC	Date	01.16.13
Approved	REM	Scale	1"=50'

LP-1

Sheet 20 of 28

P:\Jobs\Jobs 2012\12-1263_Kirchhoff_Hoffman Farm\DWGS\LP12126301.dwg
Layout: LP-1 Plot Date: 7/9/2015

WB-40 TRUCK MOVEMENTS
SCALE: 1=50'

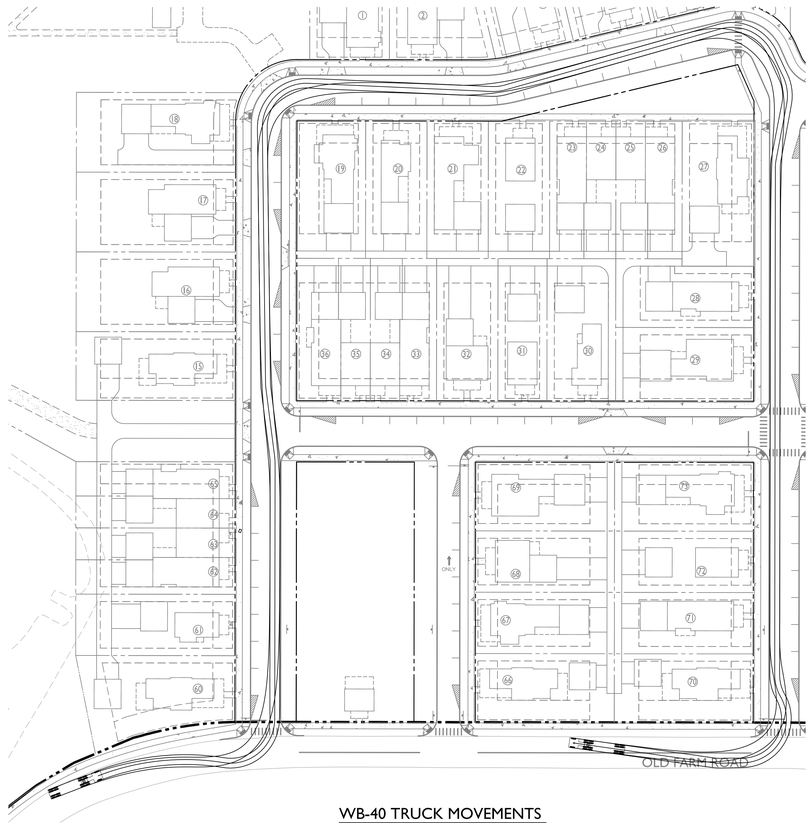

WB-40 TRUCK MOVEMENTS
SCALE: 1=50'

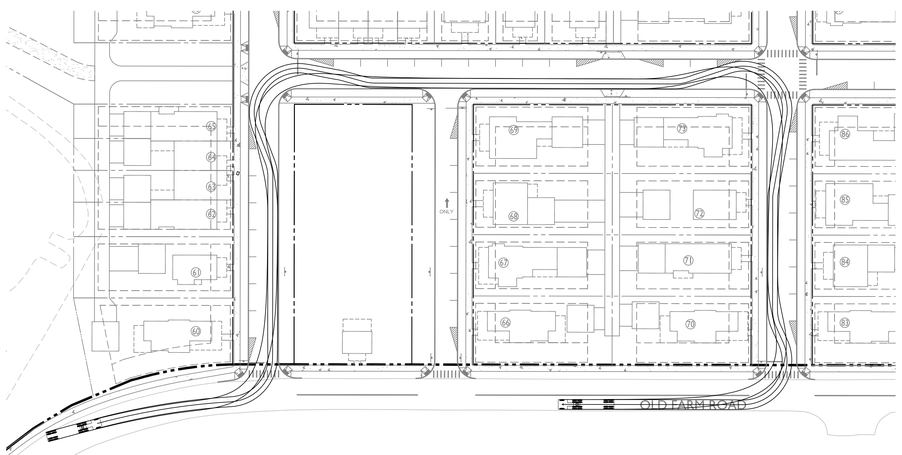

WB-40 TRUCK MOVEMENTS
SCALE: 1=50'

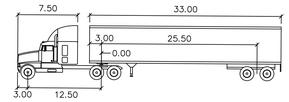

WB-40 feet

Tractor Width	: 8.00	Lock to Lock Time	: 6.00
Trailer Width	: 8.00	Steering Angle	: 20.30
Tractor Track	: 8.00	Articulating Angle	: 70.00
Trailer Track	: 8.00		

GRAPHIC SCALE
50 25 0 50
SCALE IN FEET

KIRCHHOFF PROPERTIES

Revisions:	Date	
1.	06.27.14	REVISED PER NEW LAYOUT AND DESIGN
2.	09.05.14	REVISED PER NEW LAYOUT AND DESIGN
3.	09.25.14	SUBMISSION FOR SKETCH ENDORSEMENT
4.	10.10.14	REVISED PER TOWN COMMENTS
5.	01.23.15	REVISED PER TOWN COMMENTS
6.	03.27.15	REVISED PER TOWN COMMENTS
7.	06.05.15	REVISED PER TOWN COMMENTS

LRC GROUP
- Land Planning
- Civil Engineering
- Environmental Services
- Land Surveying
- Landscape Architecture

85 Civic Center Plaza, Suite 103
Poughkeepsie NY 12601
Tel:845.243.2880
Fax:845.265.8175

160 West Street, Suite E
Cromwell, CT 06416
Tel:860.635.2877 Fax:860.635.4226
www.lrcconsult.com

Land Resource Consultants, Inc.
LRC Engineering & Surveying, P.C.
LRC Environmental Services, Inc.
LRC Engineering and Surveying, LLC

TRUCK TURNING PLAN

HOFFMAN PROPERTY

OLD FARM ROAD
TOWN OF RED HOOK
DUTCHESS COUNTY NEW YORK

Designed	SMC	CAD File	TT12126301	TT-1
Drawn	SMC	Project No.	12-1263	
Checked	KFC	Date	01.16.13	
Approved	REM	Scale	1"=50'	Sheet 21 of 28

X:\Jobs\Jobs 2012\12-1263_Kirchhoff_Hoffman Farm\DWGS\TT12126301.dwg
Layout: TRUCK TURNING PLAN 30X42

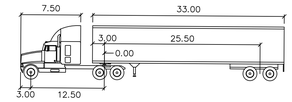

WB-40 feet

Tractor Width	: 8.00	Lock to Lock Time	: 6.00
Trailer Width	: 8.00	Steering Angle	: 20.30
Tractor Track	: 8.00	Articulating Angle	: 70.00
Trailer Track	: 8.00		

WB-40 TRUCK MOVEMENTS
SCALE: 1=50'

WB-40 TRUCK MOVEMENTS
SCALE: 1=50'

GRAPHIC SCALE
50 25 0 50
SCALE IN FEET

KIRCHHOFF PROPERTIES

#	Date	Revisions
1.	06.27.14	REVISED PER NEW LAYOUT AND DESIGN
2.	09.05.14	REVISED PER NEW LAYOUT AND DESIGN
3.	09.25.14	SUBMISSION FOR SKETCH ENDORSEMENT
4.	10.10.14	REVISED PER TOWN COMMENTS
5.	01.23.15	REVISED PER TOWN COMMENTS
6.	03.27.15	REVISED PER TOWN COMMENTS
7.	06.05.15	REVISED PER TOWN COMMENTS

LRC GROUP
- Land Planning
- Civil Engineering
- Environmental Services
- Land Surveying
- Landscape Architecture

85 Civic Center Plaza, Suite 103
Poughkeepsie NY 12601
Tel:845.243.2880
Fax:845.265.8175

160 West Street, Suite E
Cromwell, CT 06416
Tel:860.635.2877 Fax:860.635.4226
www.lrcconsult.com

Land Resource Consultants, Inc.
LRC Engineering & Surveying, P.C.
LRC Environmental Services, Inc.
LRC Engineering and Surveying, LLC

TRUCK TURNING PLAN

HOFFMAN PROPERTY

OLD FARM ROAD
TOWN OF RED HOOK
DUTCHESS COUNTY NEW YORK

Designed	SMC	CAD File	TT12126302
Drawn	SMC	Project No.	12-1263
Checked	KFC	Date	01.16.13
Approved	REM	Scale	1"=50'

TT-2

X:\Jobs\Jobs_2012\12-1263_Kirchhoff_Hoffman Farm\DWGS\TT12126302.dwg
Layout: TRUCK TURNING PLAN 30X42

KIRCHHOFF PROPERTIES

#	Date	Revisions
1.	06.27.14	REVISED PER NEW LAYOUT AND DESIGN
2.	09.05.14	REVISED PER NEW LAYOUT AND DESIGN
3.	09.25.14	SUBMISSION FOR SKETCH ENDORSEMENT
4.	10.10.14	REVISED PER TOWN COMMENTS
5.	01.23.15	REVISED PER TOWN COMMENTS
6.	03.27.15	REVISED PER TOWN COMMENTS
7.	06.05.15	REVISED PER TOWN COMMENTS

LRC GROUP

- Land Planning
- Civil Engineering
- Environmental Services
- Land Surveying
- Landscape Architecture

85 Civic Center Plaza, Suite 103
Poughkeepsie NY 12601
Tel:845.243.2880
Fax:845.265.8175

160 West Street, Suite E
Cromwell, CT 06416
Tel:860.635.2877 Fax:860.635.4226
www.lrcconsult.com

Land Resource Consultants, Inc.
LRC Engineering & Surveying, P.C.
LRC Environmental Services, Inc.
LRC Engineering and Surveying, LLC

AMENITIES PLAN

HOFFMAN PROPERTY

OLD FARM ROAD
TOWN OF RED HOOK
DUTCHESS COUNTY NEW YORK

Designed	SMC	CAD File	AM12126301
Drawn	SMC	Project No.	12-1263
Checked	KFC	Date	01.16.13
Approved	REM	Scale	1"=50'

AM-1

X:\Jobs\Jobs 2012\12-1263_Kirchhoff_Hoffman Farm\DWGS\AM12126301.dwg
Layout: SITE PLAN 30142

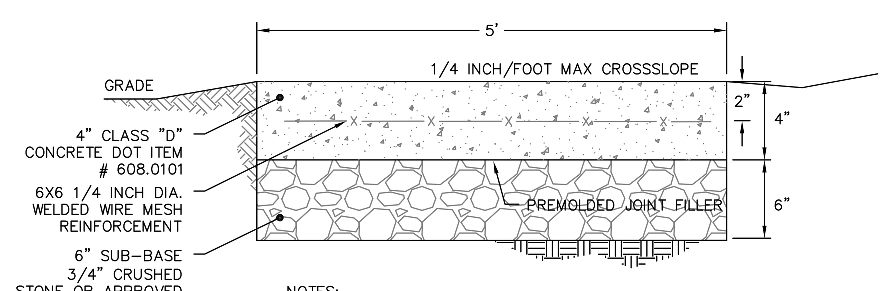

NOTES:
1. COMPACT NATIVE MATERIAL PRIOR TO INSTALLTION OF STONE SUBBASE.

CONCRETE SIDEWALK DETAIL
NOT TO SCALE

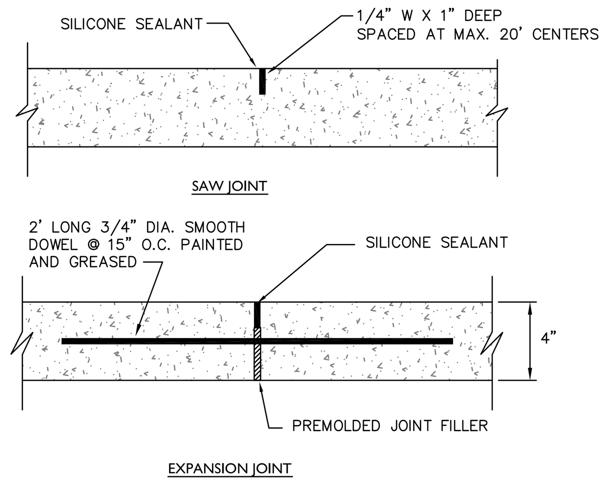

NOTES:
1. CONSTRUCTION SAW JOINT TO BE PROVIDED EVERY 5 FEET WITH AN EXPANSION JOINT EVERY 20 FEET.
2. PROVIDE EXPANSION JOINT AT TOP AND BOTTON OF CURB RAMP.

CONCRETE CONSTRUCTION JOINT
NOT TO SCALE

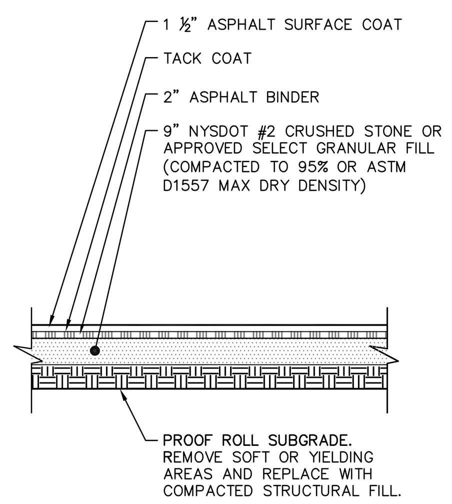

ROAD ASPHALT PAVING
NOT TO SCALE

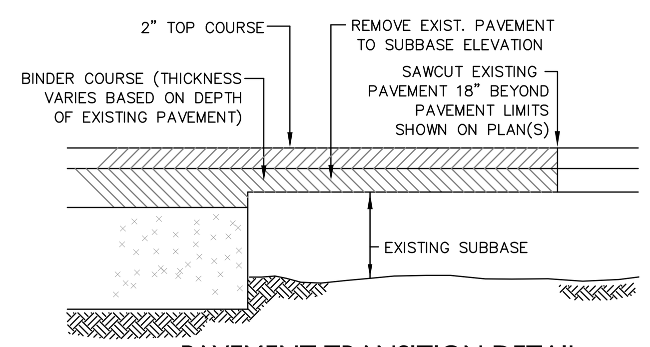

PAVEMENT TRANSITION DETAIL
NOT TO SCALE

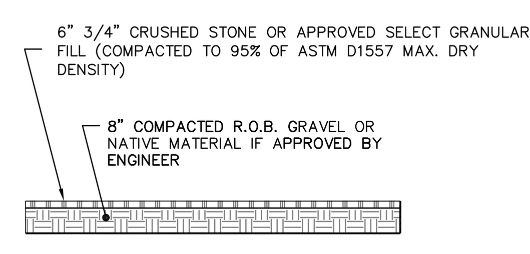

STANDARD GRAVEL ACCESS ROAD
NOT TO SCALE

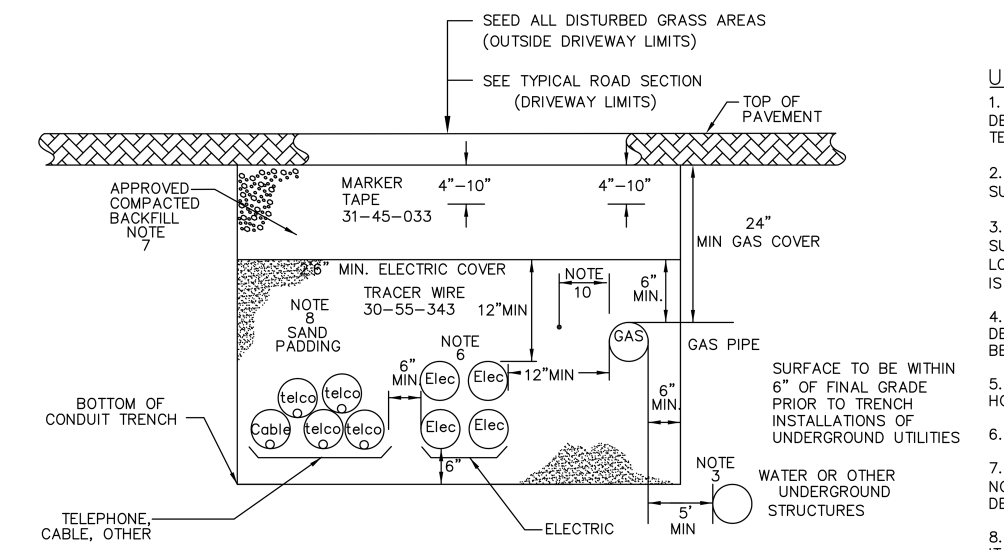

UNDERGROUND UTILITY TRENCH DETAIL
NOT TO SCALE
NOTE: DETAIL FROM CENTRAL HUDSON DESIGN GUIDELINES 5/07

UNDERGROUND GAS AND ELECTRIC NOTES:
1. THE CONTRACTOR SHALL COORDINATE WITH ALL APPLICABLE UTILITY PROVIDERS TO DETERMINE THE LOCATION OF ALL UNDERGROUND ELECTRIC, GAS, CABLE, FIBER, OR TELECOMMUNICATIONS.

2. THE MINIMUM CLEARANCE FROM GAS AND ELECTRIC TO OTHER "DRY" UTILITIES SUCH AS TEL. COM. AND CABLE SHALL BE 6".

3. THE MINIMUM CLEARANCE FROM GAS AND ELECTRIC TO OTHER "WET" UTILITIES SUCH AS WATER & SEWER SHALL BE 12". CONSULT WITH OTHER UTILITIES OR REVIEW LOCAL ORDINANCES FOR ADDITIONAL CLEARANCE REQUIREMENTS. IF 12" CLEARANCE IS NOT POSSIBLE REFER TO FIGURE 19 (CENTRAL HUDSON DESIGN GUIDELINES)

4. ALL OTHER UTILITY SEPARATIONS SHOULD BE MAINTAINED AS OUTLINED IN THE DETAIL. IF SEPARATIONS CAN NOT BE ACHIEVED FOR ANY REASON APPROVAL MUST BE OBTAINED FROM UTILITY PROVIDER.

5. IF A COMMON TRENCH IS PROVIDED GAS SHALL BE INSTALLED ON THE FIELD OR HOUSE SIDE OF THE ELECTRIC.

6. SPACING SHALL BE MAINTAINED FOR CONCRETE ENCASED DUCTS.

7. COMPACTED SELECT BACKFILL MAY BE ON-SITE MATERIAL PROVIDED IT CONTAINS NO ROCKS OR STONES OVER 6" DIAMETER, ROOTS, STUMPS, OR CONSTRUCTION DEBRIS.

8. SANDPADDING SHALL BE IMPORTED NATURAL OR MANUFACTURED CONCRETE SAND. IT SHALL CONSIST OF HARD, STRONG, DURABLE PARTICLES FREE OF CLAY, LOAM, OR HARMFUL SUBSTANCES. THE MATERIAL SHALL BE SCREENED TO BE FREE OF SHARP STONES OR STONES LARGER THAN 1/4 INCH. THE COLOR OR CONSISTENCY SHALL BE SIGNIFICANTLY DIFFERENT FROM NATIVE MATERIAL.

9. ELECTRICAL AND COMMUNICATIONS CABLES SHALL BE COVERED WITH A MINIMUM 12" OF SAND PADDING. GAS MAINS SHALL BE COVERED WITH A MINIMUM OF 6 INCHES OF SAND PADDING.

10. LOCATE TRACER WIRE A SUFFICIENT DISTANCE FROM PLASTIC PIPE TO MINIMIZE TRACER WIRE TO PIPE CONTACT.

11. UNDERGROUND ELECTRICAL SHALL BE IN ACCORDANCE WITH NEC, AND OTHER LOCAL CODES AND STANDARDS.

12. ALL UTILITIES SHALL BE PLACES IN UNDERGROUND SCHEDULE 40 PVC CONDUIT. ALL RISERS OR PENETRATIONS SHALL BE IN SCHEDULE 80 PVC OR GALVANIZED STEEL PIPE.

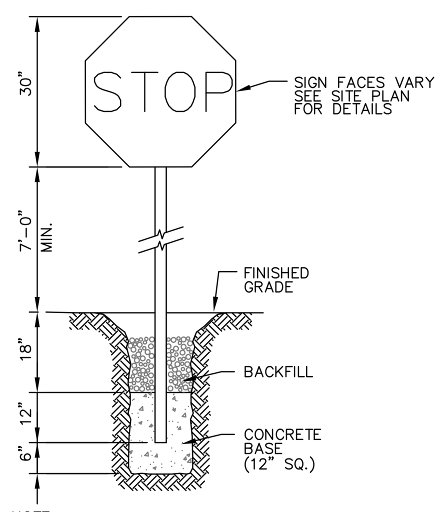

NOTE:
CONSTRUCT SIGN IN ACCORDANCE WITH CURRENT NYSDOT AND MUTCD STANDARDS.

SIGN DETAIL
NOT TO SCALE

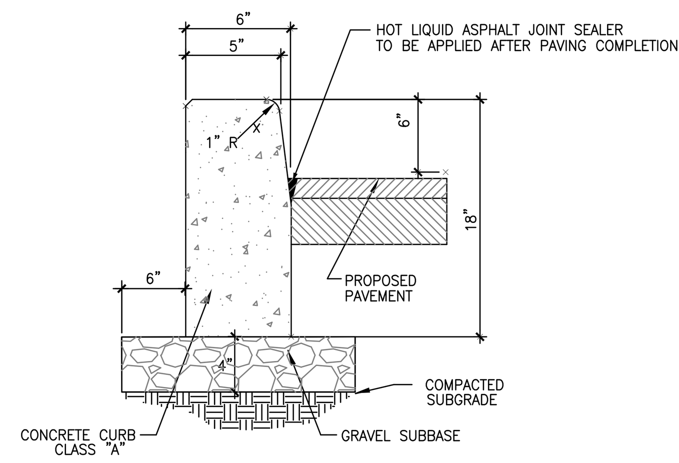

ON-SITE CONC. CURB
NOT TO SCALE

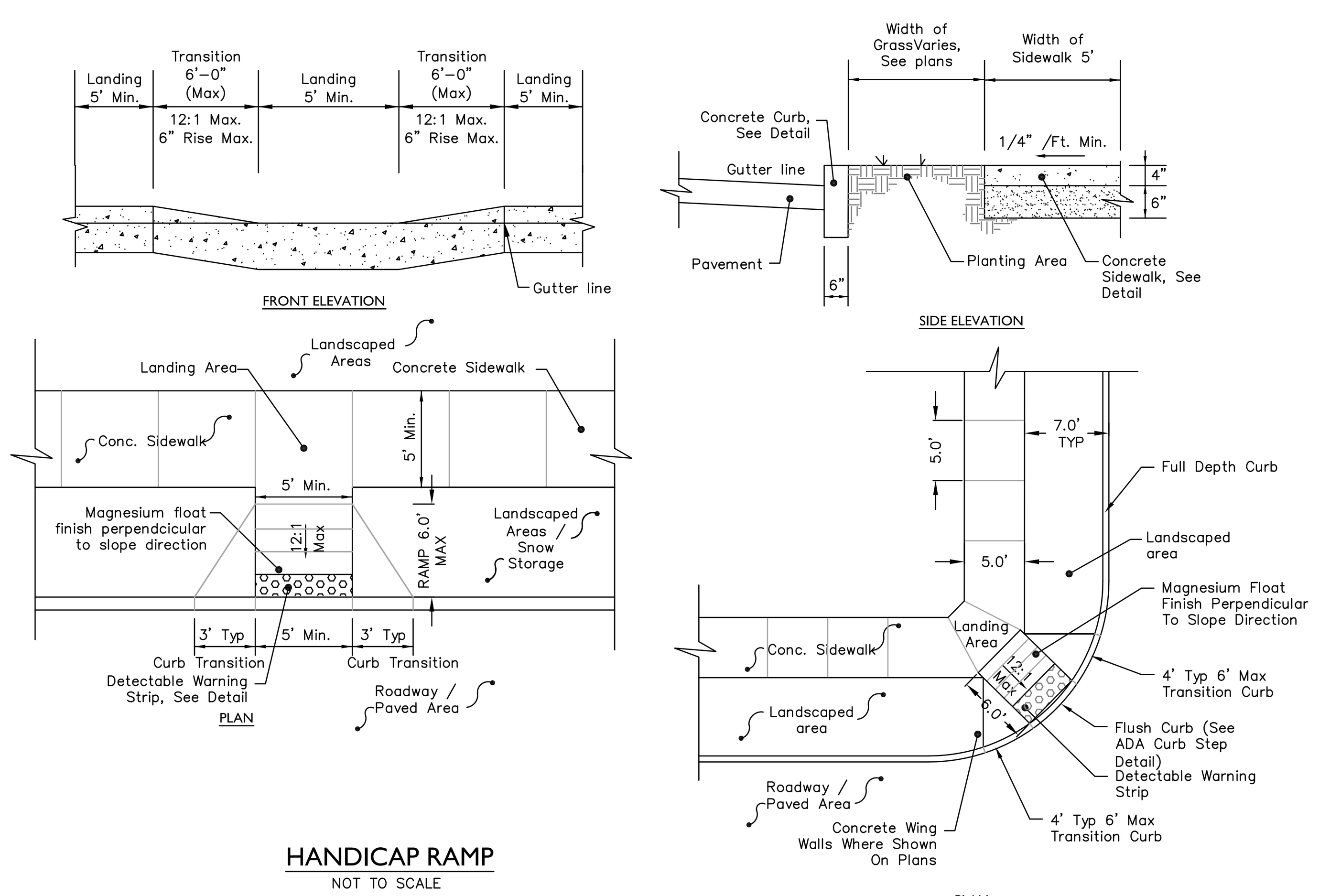

HANDICAP RAMP
NOT TO SCALE

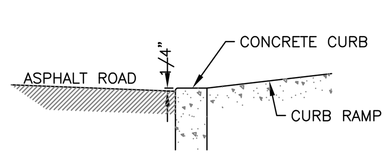

ADA CURB STEP DETAIL
NOT TO SCALE

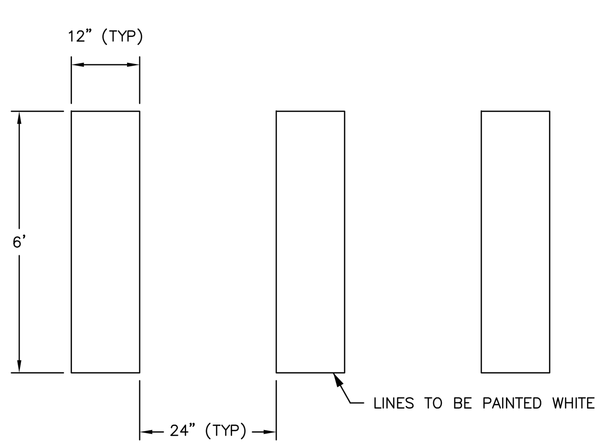

1. PROVIDE TWO COATS OF PAINT ON ALL SURFACES.
2. SEE PLANS FOR LOCATION OF CROSSWALKS.

PAINTED CROSSWALK STRIPING
NOT TO SCALE

NOTES:

1. THE DETAILS PROVIDED ARE NOT DRAWN TO SCALE, THE QUANTITY OF DOMES DEPICTED ON THE DETECTABLE WARNING UNIT (THE DOMES AND THE ENTIRE 24" LEVEL SURFACE) IS FOR ILLUSTRATION ONLY.
2. THE SIZE OF THE DETECTABLE WARNING FIELD SHALL BE 24" IN THE DIRECTION OF TRAVEL AND SHALL EXTEND THE FULL WIDTH OF THE CURB RAMP OR FLUSH SURFACE.
3. THE ROWS OF DOMES SHALL BE ALIGNED TO BE PERPENDICULAR OR RADIAL TO THE GRADE BREAK BETWEEN THE RAMP LANDING OR CURB RAMP AND THE STREET.
4. WHERE DOMES ARE ARRAYED RADIALLY THEY MAY DIFFER IN DOME DIAMETER AND CENTER-TO- CENTER SPACING WITHIN THE RANGES SPECIFIED ON THIS SHEET.
5. THE DETECTABLE WARNING FIELD SHALL BE THE COLOR SPECIFIED IN THE CONTRACT DOCUMENTS OR MEET THE REQUIREMENTS OF THE STANDARD SPECIFICATIONS.
6. DETECTABLE WARNING SHALL BE LOCATED SO THAT THE EDGE OR CORNER OF THE WARNING FIELD NEAREST TO THE ROADWAY IS 5" TO 9" FROM THE FRONT OF THE CURB OR THE ROADWAY EDGE (12" WHERE TRAVERSABLE CURB IS USED). INSTALL THE DETECTABLE WARNING FIELD BEHIND THE FLUSH CURB.
7. THE EDGE OF THE DETECTABLE WARNING FIELD NEAREST TO A RAILROAD CROSSING SHALL BE 6'-0" MINIMUM AND 15'-0" MAXIMUM FROM THE CENTERLINE OF THE NEAREST RAIL.

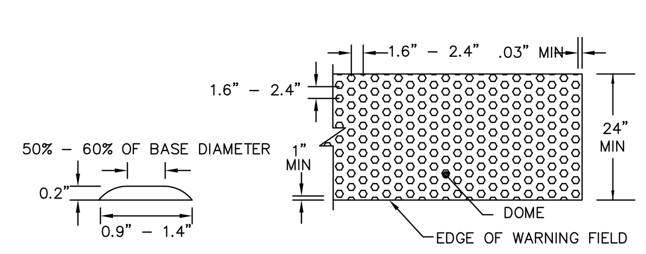

DETECTABLE WARNING STRIP
NOT TO SCALE

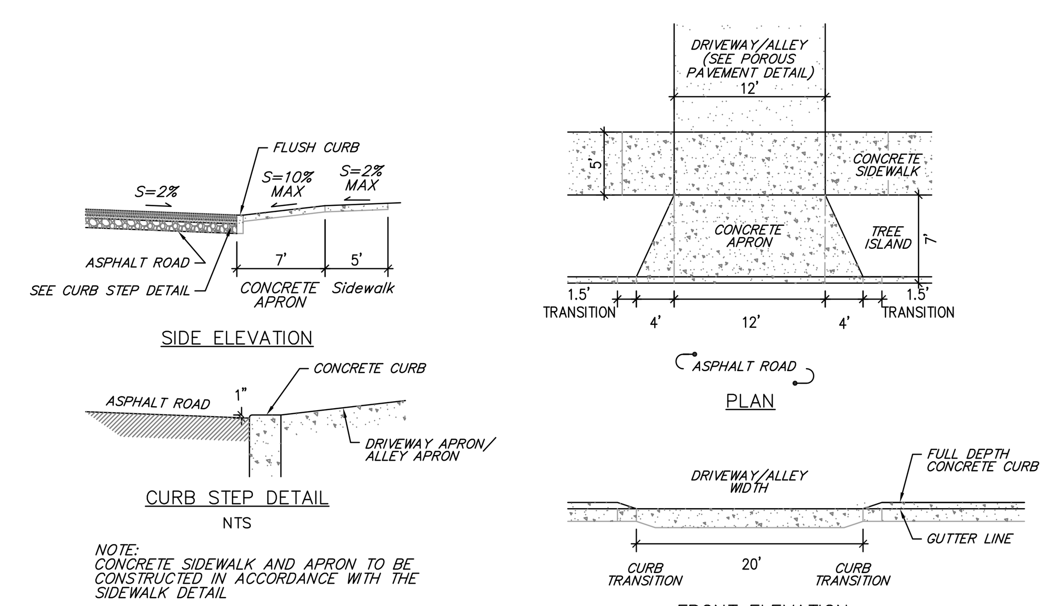

DRIVEWAY/ALLEY CURB TRANSITION
SCALE: 1"=10'

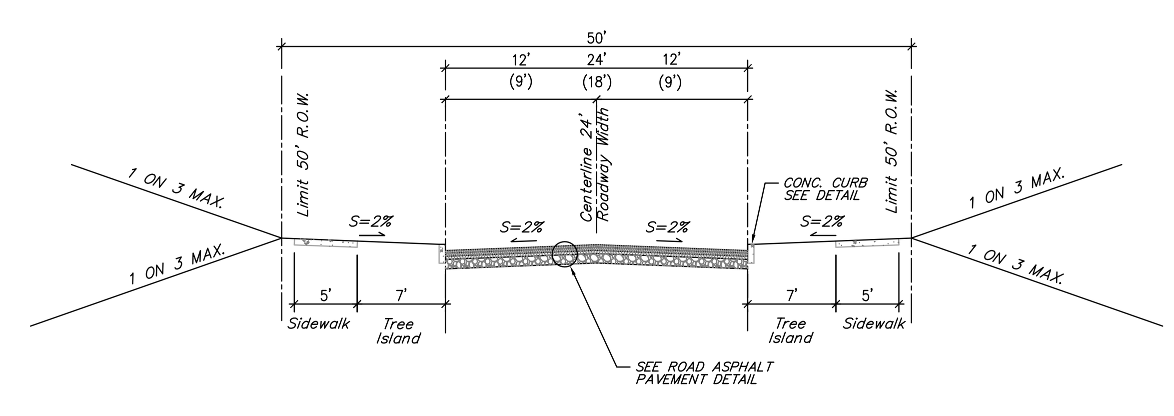

TYPICAL ROAD SECTION DETAIL
SCALE: 1"=10'

X:\Jobs\Jobs 2012\12-1263_Kirchhoff_Hoffman Farm\DWGS\DN12126301.dwg
Layout: DETAIL SHEET 30X42

KIRCHHOFF PROPERTIES

#	Date	Revisions:
1.	06.27.14	REVISED PER NEW LAYOUT AND DESIGN
2.	09.05.14	REVISED PER NEW LAYOUT AND DESIGN
3.	09.25.14	SUBMISSION FOR SKETCH ENDORESEMENT
4.	10.10.14	REVISED PER TOWN COMMENTS
5.	01.23.15	REVISED PER TOWN COMMENTS
6.	03.27.15	REVISED PER TOWN COMMENTS
7.	06.05.15	REVISED PER TOWN COMMENTS

LRC GROUP
- Land Planning
- Civil Engineering
- Environmental Services
- Land Surveying
- Landscape Architecture

85 Civic Center Plaza, Suite 103
Poughkeepsie NY 12601
Tel:845.243.2880
Fax:845.265.8175

160 West Street, Suite E
Cromwell, CT 06416
Tel:860.635.2877 Fax:860.635.4226
www.lrcconsult.com

Land Resource Consultants, Inc.
LRC Engineering & Surveying, P.C.
LRC Environmental Services, Inc.
LRC Engineering and Surveying, LLC

SITE DETAILS

HOFFMAN PROPERTY

OLD FARM ROAD
TOWN OF RED HOOK
DUTCHESS COUNTY NEW YORK

Designed	SMC	CAD File	DN12126301
Drawn	SMC	Project No.	12-1263
Checked	KFC	Date	01.16.13
Approved	REM	Scale	NTS

DN-1

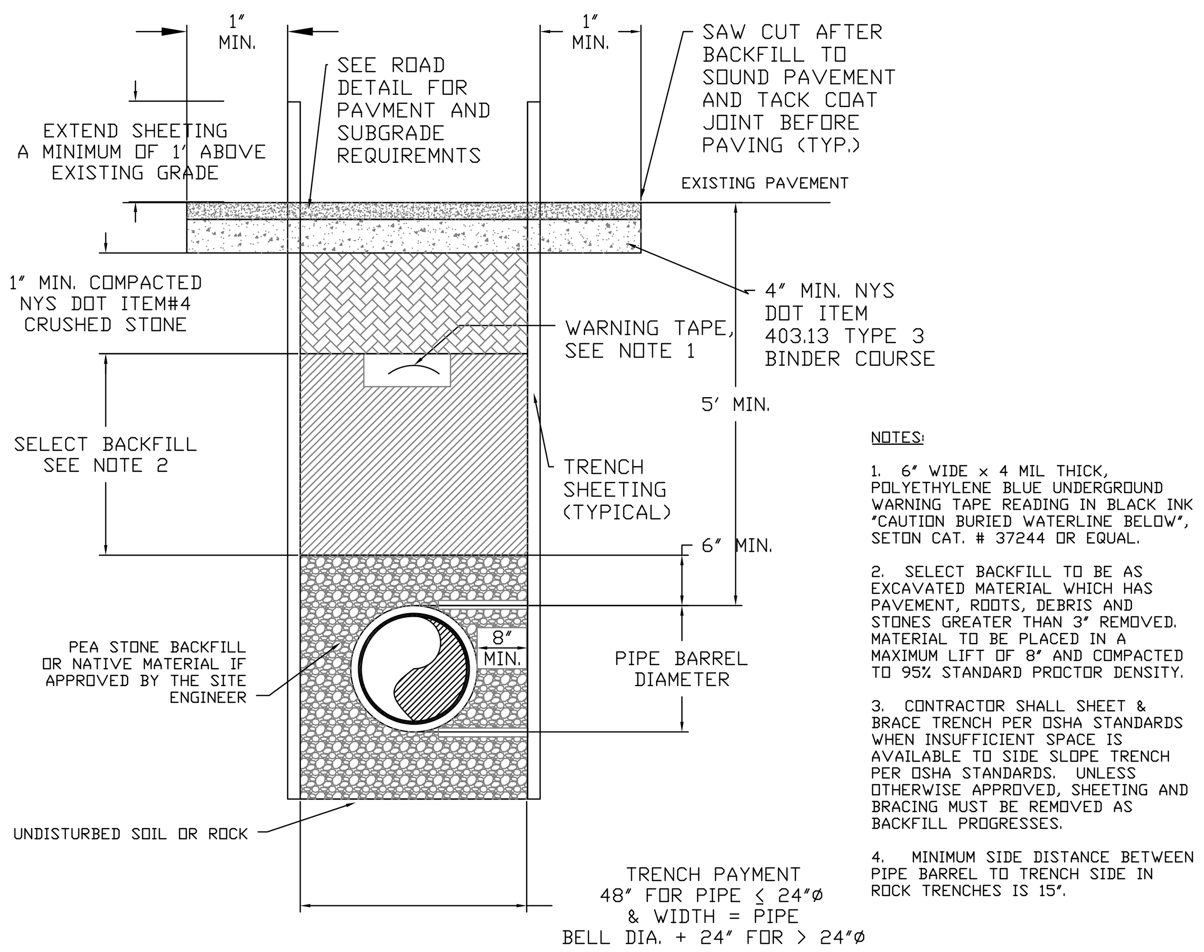

NOTES:

1. 6" WIDE x 4 MIL THICK, POLYETHYLENE BLUE UNDERGROUND WARNING TAPE READING IN BLACK INK "CAUTION BURIED WATERLINE BELOW", SETON CAT. # 37244 OR EQUAL.

2. SELECT BACKFILL TO BE AS EXCAVATED MATERIAL WHICH HAS PAVEMENT, ROOTS, DEBRIS AND STONES GREATER THAN 3" REMOVED. MATERIAL TO BE PLACED IN A MAXIMUM LIFT OF 8" AND COMPACTED TO 95% STANDARD PROCTOR DENSITY.

3. CONTRACTOR SHALL SHEET & BRACE TRENCH PER OSHA STANDARDS WHEN INSUFFICIENT SPACE IS AVAILABLE TO SIDE SLOPE TRENCH PER OSHA STANDARDS. UNLESS OTHERWISE APPROVED, SHEETING AND BRACING MUST BE REMOVED AS BACKFILL PROGRESSES.

4. MINIMUM SIDE DISTANCE BETWEEN PIPE BARREL TO TRENCH SIDE IN ROCK TRENCHES IS 15".

WATER MAIN TRENCH DETAIL

NOT TO SCALE

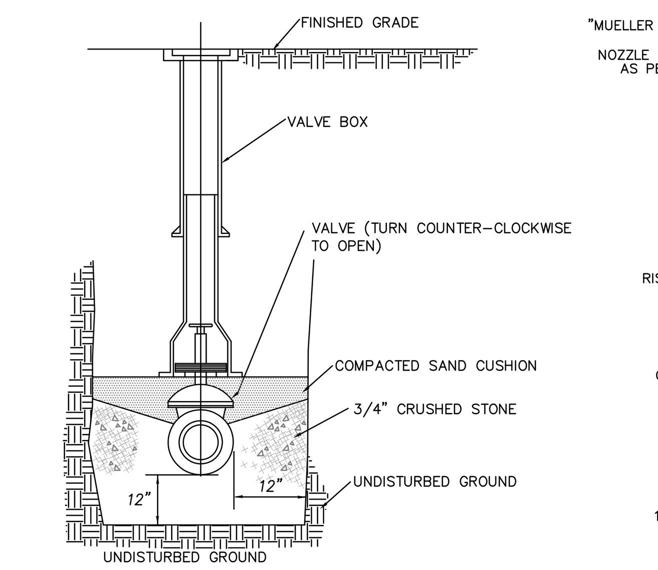

VALVE AND VALVE BOX DETAIL

NOT TO SCALE

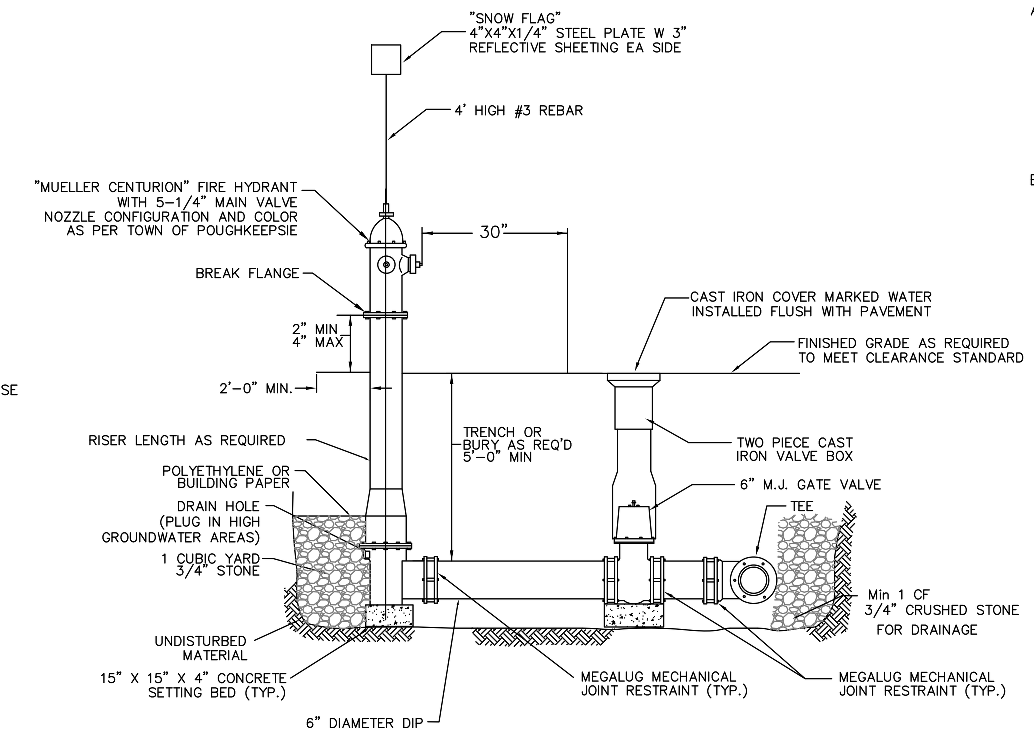

HYDRANT AND VALVE ASSEMBLY DETAIL INSTALLATION (ADJACENT CURB)

NOT TO SCALE

HYDRANTS TO BE MUELLER CENTURION OR APPROVED EQUAL

NOTES:

1. HYDRANT WITH PROPER RISER LENGTH (DEPTH OF BURY) SHALL BE INSTALLED AS REQUIRED TO MEET THE 2" MIN. TO 4" MAX. CLEARANCE BETWEEN THE CENTER OF THE BREAK FLANGES AND THE ASPHALT CONCRETE PAD.
2. FIRE HYDRANT TO BE FLOW TESTED AND BANDED IN ACCORDANCE WITH NFPA STANDARDS.

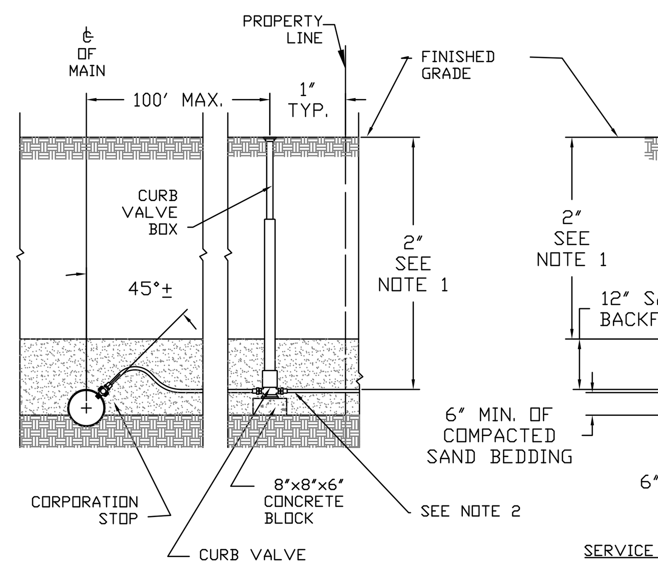

SERVICE TAP SECTION

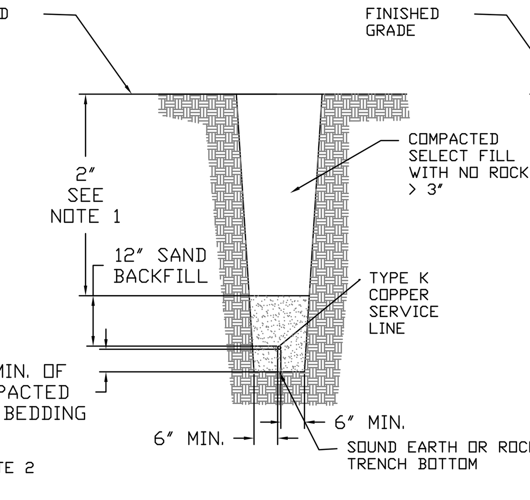

SERVICE TRENCH SECTION

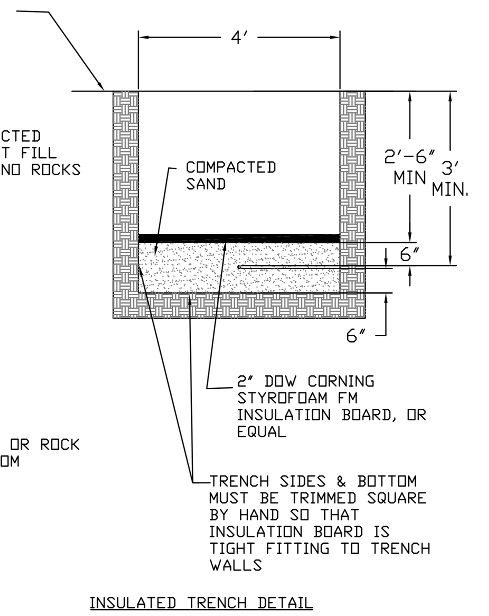

INSULATED TRENCH DETAIL

NOTES:

1. DEPTH OF SERVICE MAY BE REDUCED TO 3' MIN. W/ PERMISSION OF AUTHORITY PROVIDED INSULATION IS INSTALLED PER INSULATED TRENCH DETAIL
2. CUSTOMER INSTALLS, OWNS AND MAINTAINS SERVICE LINE FROM OUTLET OF THE CURB VALVE
3. CURB VALVE SHALL BE LOCATED AT 1'-6" FROM THE PROPERTY LINE TOWARDS THE MAIN, BUT NO GREATER THAN 100' (60' PREFERRED) FROM THE CENTERLINE OF THE MAIN TO THE CURB VALVE, WHICHEVER ESTABLISHES THE SHORTEST DISTANCE FROM THE MAIN.
4. SERVICE PIPING SHALL BE CONTINUOUS WITHOUT JOINTS OR FITTINGS FROM THE MAIN TAP TO THE CURB VALVE.
5. BEDDING MAY BE NATIVE MATERIAL IF IT IS CLEAN SANDY MATERIAL VOID OF STONES AND DEBRIS AND THE MATERIAL IS INSPECTED AND APPROVED BY THE SITE ENGINEER.

DOMESTIC SERVICE DETAIL

NOT TO SCALE

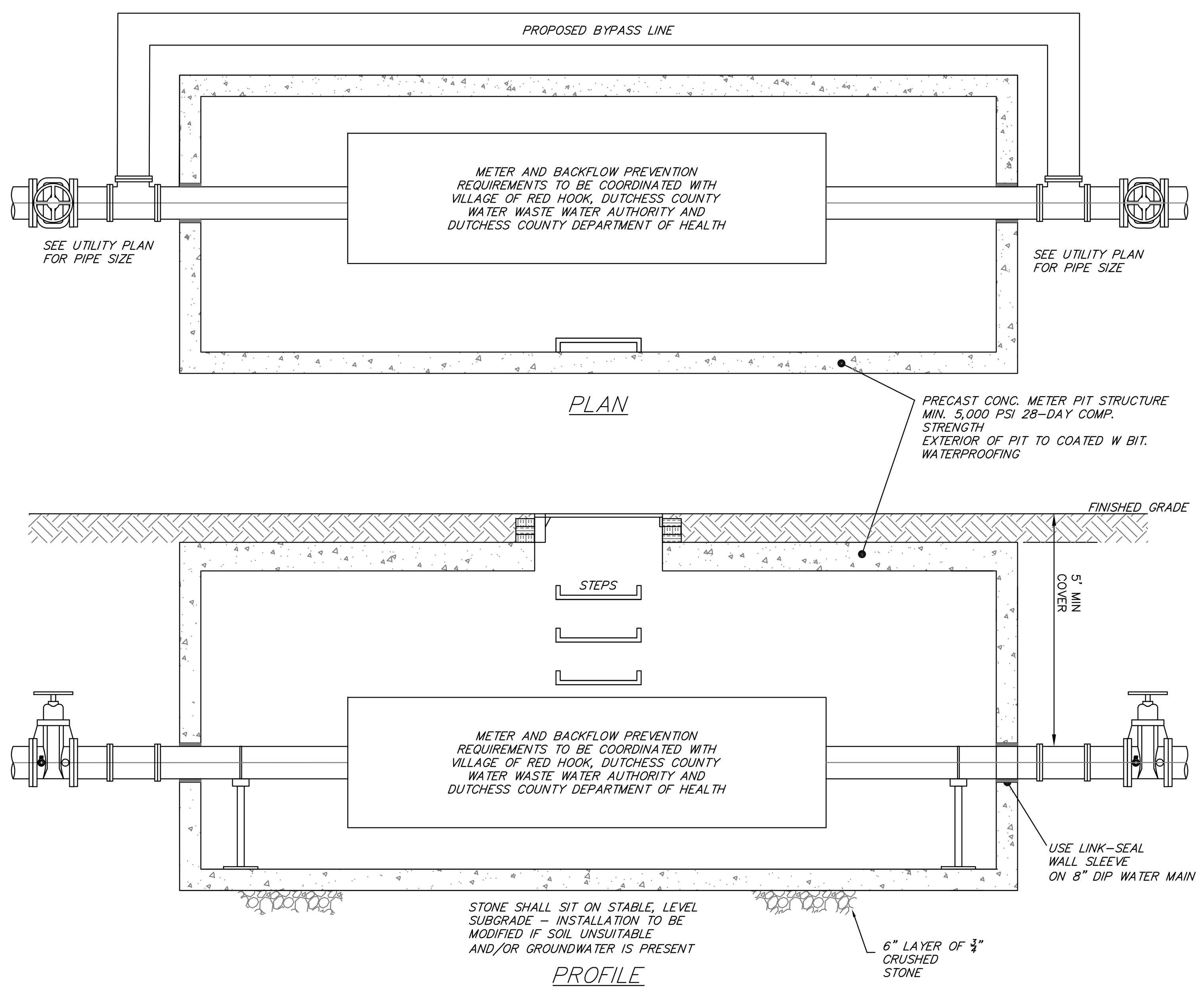

METER INSTALLATION INSIDE METER PIT

NOT TO SCALE

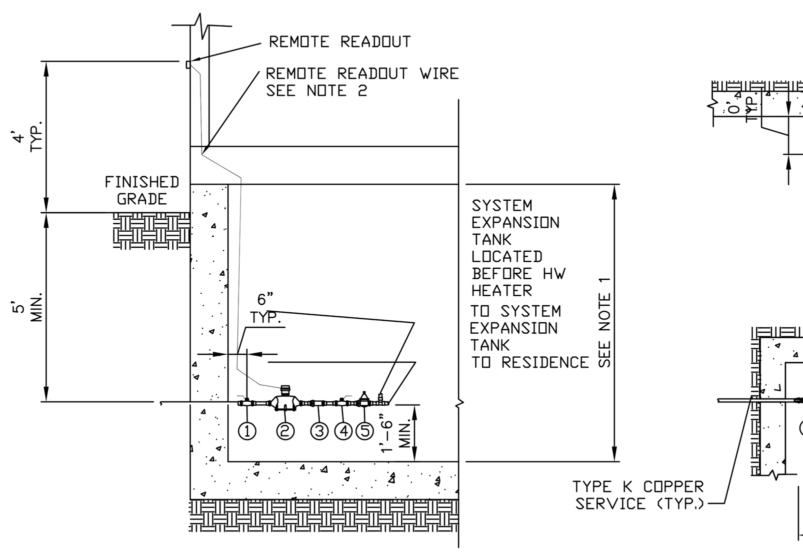

TYPICAL ELEVATION

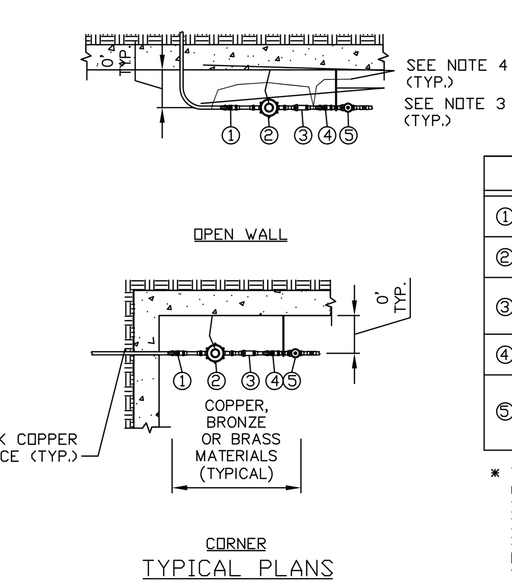

TYPICAL PLANS

ITEM LISTING	
①	INSIDE BRONZE SERVICE SHUT OFF VALVE
②	METER W/ REMOTE READOUT (PROVIDED BY AUTHORITY)
③*	BRONZE DOUBLE CHECK VALVE, WATTS 007 OR APPROVED EQUAL
④	BRONZE METER ISOLATION VALVE
⑤	SERVICE PRESSURE REGULATOR (REQUIRED FOR SERVICE PRESSURE ≥ 40 PSI.)

* TYPICAL INSTALLATION - CONTACT AUTHORITY IF INSTALLING YARD HYDRANT, IRRIGATION SYSTEM, SWIMMING POOLS OR OTHER HAZARDS TO DRINKING WATER.

NOTES:

1. A MINIMUM OF 7'-4" HEADROOM IS REQUIRED ALONG THE TRAVEL ROUTE FROM THE POINT OF ENTRY TO THE METER. AREA SHOULD HAVE ADEQUATE LIGHTING FOR SAFE TRAVEL TO AND WORK AT THE METER. IF CONDITIONS ARE UNSATISFACTORY TO THE AUTHORITY, THE CUSTOMER MAY BE REQUIRED TO INSTALL AN EXTERIOR METER BOX.

2. CONTACT AUTHORITY TO LOCATE REMOTE READOUT PRIOR TO INTERIOR OR EXTERIOR WALL FINISH

3. PIPING SHALL BE SUPPORTED TO PREVENT ANY STRESS ON THE METER.
4. GROUND WATER SERVICE AND BOND METER AND DOUBLE CHECK VALVE PER THE NATIONAL ELECTRICAL CODE.

RESIDENTIAL METER DETAIL

NOT TO SCALE

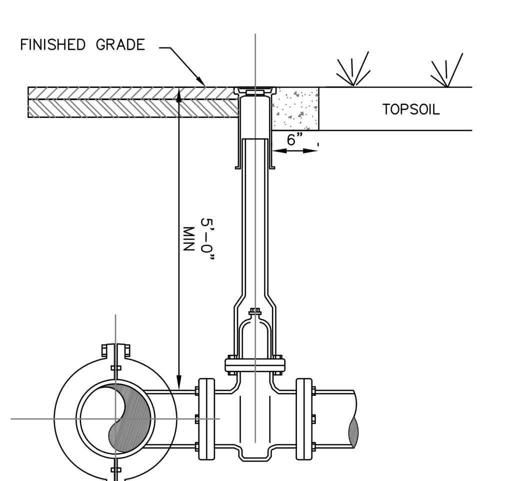

NOTES:
1. *WET TAP OF WATER MAIN SHALL BE PERFORMED UNDER THE SUPERVISION OF THE ENGINEER, AND THE MUNICIPALITY*
2. *TAPPING SLEEVE AND VALVE SUPPORT SHALL BE COORDINATED WITH THE ENGINEER TO SUIT FIELD CONDITIONS.*
3. *MINIMUM DISTANCE TO JOINTS, FITTINGS, OR OTHER WET TAPS OR STOPS SHALL BE 3 FEET.*
4. *VALVE OPERATING DIRECTION SHALL BE COUNTERCLOCKWISE TO OPEN (TURNING LEFT).*
5. *STAINLESS STEEL TAPPING SLEEVE SHALL BE SELECTED TO FIT EXISTING PIPE MATERIAL (C.I., D.I., A.C.) AND OUTSIDE DIAMETERS.*
6. *TAPPING SLEEVE, RESILIENT WEDGE VALVE & VALVE BOX SHALL BE IN ACCORDANCE WITH THE MUNICIPALITY STANDARDS & AS MANUFACTURED BY (MUELLER) OR APPROVED EQUIVALENT.*
7. *ALL JOINTS SHALL UTILIZE MEGA LUG RETAINER GLAND.*
8. *PIPE BEDDING AND BACKFILL TO BE INSTALLED IN ACCORDANCE WITH PIPE TRENCHING DETAIL.*

WATER TAPPING SLEEVE AND VALVE

NOT TO SCALE

WATER MAINS AND APPURTENANCES

A. WORK

THIS WORK SHALL CONSIST OF THE CONSTRUCTION OF WATER MAINS AND APPURTENANCES INCLUDING THE FURNISHING OF ALL MATERIALS, INSTALLATION OF VALVES AND HYDRANTS AND SERVICE PIPE, DISINFECTION, AND TESTING THE COMPLETE INSTALLATION FOR LEAKAGE AND POTABILITY. THE TYPE, SIZE AND CLASS OF MATERIALS REQUIRED FOR CONSTRUCTION SHALL BE AS SHOWN ON THE DRAWINGS OR AS STATED IN THESE SPECIFICATIONS.

B. MATERIALS
WATER MAINS

1. ALL WATER MAINS SHALL BE CEMENT LINED DUCTILE IRON PIPE, CLASS 52 PUSH-ON JOINT, UNLESS OTHERWISE SPECIFIED BY OR APPROVED BY THE SITE ENGINEER. JOINTING SHALL EMPLOY "MEGALUG" CONNECTIONS, FIELD LOCK GASKET, OR AS ALTERNATIVELY SPECIFIED BY THE SITE ENGINEER. WET TAP OF PUBLIC WATER SYSTEM SHALL BE APPROVED AND SUPERVISED BY THE DCWWA OR TOWN OF RED HOOK WATER DEPARTMENT AS APPLICABLE. TAPPING SLEEVE SHALL BE STAINLESS STEEL OR APPROVED EQUAL. ALL MAINLINE VALVES SHALL BE RESILIENT WEDGE OR APPROVED EQUAL.

ALL HOUSES TO BE INDIVIDUALLY METERED.

2. GATE VALVES

GATE VALVES SHALL CONFORM TO AWWA C-509, WITH DUCTILE IRON BODY, BRONZE TRIM, RESILIENT SEAT, DOUBLE DISC, NON-RISING STEM, MECHANICAL JOINTS, "O" RING SEALS, 2 INCH SQUARE WRENCH NUT. OPERATION SHALL BE COUNTER CLOCKWISE TO OPEN. VALVES SHALL BE METROSEAL 250/TYTON VALVE, AS MANUFACTURED BY U.S. PIPE, OR EQUAL. EACH VALVE SHALL BE PROVIDED WITH TWO PIECE SLIDE TYPE CAST IRON VALVE BOX WITH COVER AND LID, OR EQUAL. ALL VALVE BOXES SHALL BE LABELED "WATER".

3. FLUSHING HYDRANTS

FLUSHING HYDRANTS SHALL BE THE 2-1/2" NST OUTLET FIP INLET, A NON-TURNING OPENING ROD AND TURN TO THE LEFT. ALL OF THE WORKING PARTS SHALL BE BRONZE-TO BRONZE DESIGN, AND BE SERVICEABLE FROM ABOVE GRADE. HYDRANTS SHALL BE LOCKABLE. COMPLETE WITH CAPS AND CHAINS, AND SHALL HAVE "O" RING STEM SEALS. PAINT: RED BODY. SEE C.9. HYDRANTS.

4. RESTRAINED JOINTS

MANUFACTURER: EBBA IRON INC. (MEGALUG), STANDARD INTERNATIONAL (MODEL B)

ALL HYDRANTS, PIPING VALVES, AND FITTINGS SHALL BE RESTRAINED.

MECHANICAL JOINT RESTRAINT SHALL BE INCORPORATED INTO THE FOLLOWER GLAND AND SHALL INCLUDE A RESTRAINING MECHANISM WHICH WHEN ACTIVATED, IMPARTS MULTIPLE WEDGING AGAINST THE PIPE, INCREASING ITS RESISTANCE AS THE INTERNAL PRESSURE INCREASES.

JOINT FLEXIBILITY SHALL BE MAINTAINED AFTER BURIAL.

GLANDS SHALL BE ASTM A536 DUCTILE IRON.

GLANDS SHALL BE SUCH THAT THEY CAN BE USED WITH ANSI/AWWA A21.11 AND ANSI/AWWA C153/A21.53.

TWIST-OFF NUTS SHALL BE USED TO ENSURE PROPER ACTUATING OF THE RESTRAINING DEVICES.

WORKING PRESSURE OF THE MECHANICAL JOINT RESTRAINT DEVICE SHALL BE AT LEAST 2413 KPA (350 PSI), WITH A MINIMUM SAFETY FACTOR OF 2 TO 1.

5. SERVICE LINES

SERVICE LINES SHALL BE TYPE K SOFT ANNEALED COPPER WATER TUBE CONFORMING TO ASTM B 88 WITH COMPRESSION FITTINGS, AS MANUFACTURED BY MUELLER OR APPROVED EQUAL.

6. SERVICE CONNECTIONS

A) CORPORATION STOPS:

CORPORATION STOPS SHALL BE MUELLER B-25008, OR EQUAL, ALL BRONZE CONSTRUCTION, GROUND KEY STOP, SOLID TEE HEAD, 150 PSI WORKING PRESSURE RATING AND SHALL HAVE AWWA TAPERED INLET THREADS AND A COMPRESSION TYPE OUTLET.

B) CURB STOPS:
CURB STOPS SHALL BE MUELLER H-15209, COMPRESSION INLET AND OUTLET, FULL ROUND WAY OPENING, STRAIGHT PLUG, "O" RING SEALED, OF BRASS CONSTRUCTION, SOLID TEE HEAD, 150 PSI SERVICE AND CONFORMING TO AWWA C 800 WITHOUT DRAIN HOLE.

CURB STOPS SHALL BE PROVIDED WITH A CAST IRON TWO PIECE SLIDE TYPE ARCH PATTERN BASE CURB BOX, COATED WITH CORROSION RESISTANT TAR BASED ENAMEL, COMPLETE WITH STATIONARY ROD AND PLUG COVER. CURB BOX SHALL BE MUELLER H-10385, OR EQUAL.

C) WATER SERVICE CONNECTIONS TO THE WASTEWATER TREATMENT FACILITIES AND THE RECREATION FACILITIES SHALL BE PROTECTED BY BACKFLOW PREVENTER RPZ VALVES.

C. METHOD

THE CONTRACTOR IS PROHIBITED FROM LAYING ANY PIPES, FITTINGS, OR OTHER APPURTENANCES EXCEPT UNDER DIRECT SUPERVISION OF THE ENGINEER.

1. GENERAL:

ALL WORK SHALL BE DONE IN ACCORDANCE WITH AWWA C600-93, AS MODIFIED BY THE PLANS AND THE SPECIFICATIONS, AND SHALL BE COMPLETED TO THE SATISFACTION OF THE ENGINEER AND THE OWNER OF THE WATER SYSTEM.

THE CONTRACTOR SHALL MAKE ALL NECESSARY ARRANGEMENTS, OBTAIN ALL PERMITS, AND PAY ALL CHARGES AS REQUIRED TO SATISFY THE REQUIREMENTS AND REGULATIONS OF THE OWNER OF THE WATER SYSTEM.

PRIOR TO THE START OF WORK, THE CONTRACTOR SHALL PREPARE AND SUBMIT FOR APPROVAL TO THE ENGINEER AND DCWWA. SCHEDULES OF THE PROPOSED SEQUENCE OF WORK, AND DRAWINGS OR CATALOG CUTS OF THE WATER PIPES AND APPURTENANCES COMPRISING THE WORK.

THE LOCATION OF THE EXISTING MAINS AS SHOWN ON THE CONTRACT PLANS ARE APPROXIMATE. THE LOCATION OF THE NEW WATER MAIN IS CRITICAL RELATIVE TO REQUIRED SEPARATION DISTANCES FROM ADJACENT SANITARY AND STORM SEWERS. CONTRACTOR SHALL INSTALL THE WATER MAIN IN THE EXACT LOCATIONS AS SHOWN AND PER TYPICAL DETAILS PROVIDED ON THIS SHEET. AT THE CONCLUSION OF THE WORK AND PRIOR TO ITS ACCEPTANCE, THE CONTRACTOR SHALL SUBMIT FULL SET OF RED-LINED AS-BUILT PRINTS, INDICATING WITH OFFSET DIMENSIONS FROM ADJACENT STRUCTURES, THE INSTALLED LOCATION OF THE WATER MAIN, ALL VALVES, HYDRANTS AND CURB STOPS.

DAMAGE TO EXISTING FACILITIES DUE TO CONTRACTOR'S OPERATIONS SHALL BE REPAIRED OR REPLACED AT THE CONTRACTOR'S EXPENSE.

2. EXCAVATION:

THE WATER MAINS SHALL BE LAID AND MAINTAINED TO THE LINES AND GRADES ESTABLISHED BY THESE PLANS AND SPECIFICATIONS. THE TRENCH SHALL BE EXCAVATED TO THE REQUIRED ALIGNMENTS, DEPTH, AND WIDTH SHOWN ON THE PLANS.

WHEN EXCAVATION IN ROCK IS NECESSARY, ALL ROCK SHALL BE REMOVED TO PROVIDE A CLEARANCE BELOW AND ON EACH SIDE OF ALL PIPE, VALVES, AND FITTINGS OF AT LEAST 6 INCHES. BLASTING FOR EXCAVATION SHALL BE PERMITTED ONLY AFTER SECURING APPROVALS FOR SAME FROM THE TOWN OF RED HOOK. WHEN EXCAVATION IS COMPLETED, PLACE PIPE BEDDING MATERIAL PER THE TYPICAL TRENCH DETAIL.

MATERIAL FROM ROCK EXCAVATION MAY BE USED AS BACKFILL ONLY IN CONFORMANCE WITH THE FOLLOWING REQUIREMENTS: THE BACKFILL SHALL NOT CONTAIN STONES OR ROCK MORE THAN EIGHT (8) INCHES IN THEIR LARGEST DIMENSION AND BACKFILL SHALL NOT CONTAIN MORE THAN 50 PERCENT ROCK. ALL ROCK SHALL BE UNIFORMLY DISTRIBUTED THROUGHOUT THE BACKFILL; NESTING OF ROCKS WILL NOT BE PERMITTED. MATERIAL FROM ROCK EXCAVATION WHICH IS NOT SUITABLE FOR BACKFILL AS DETERMINED BY THE ENGINEER, SHALL BE REMOVED FROM THE SITE. SUITABLE BACKFILL MATERIAL ACCEPTABLE TO THE ENGINEER SHALL BE SUBSTITUTED FOR THE UNSUITABLE ROCK MATERIAL. REMOVAL OF UNSUITABLE ROCK EXCAVATION MATERIAL. FURNISHING AND PLACING OF SUITABLE BACKFILL SHALL BE ACCOMPLISHED BY THE CONTRACTOR AT HIS EXPENSE. EXCESS ROCK SHALL BE DISPOSED OF OFF-SITE UNLESS WRITTEN PERMISSION FROM THE PROPERTY OWNER IS GRANTED FOR ON-SITE DISPOSAL OF THE EXCESS ROCK.

4. PIPE LAYING:

PROPER IMPLEMENTS, TOOLS, AND FACILITIES SATISFACTORY TO THE ENGINEER SHALL BE PROVIDED AND USED BY THE CONTRACTOR FOR THE SAFE AND CONVENIENT PROSECUTION OF THE WORK. ALL PIPE SHALL BE CAREFULLY LOWERED INTO THE TRENCH PIECE BY PIECE BY MEANS OF A DERRICK, ROPES OR OTHER SUITABLE TOOLS OR EQUIPMENT, IN SUCH A MANNER AS TO PREVENT DAMAGE TO MATERIALS AND PROTECTIVE COATINGS OR LININGS. UNDER NO CIRCUMSTANCES SHALL MATERIALS BE DROPPED OR DUMPED INTO THE TRENCH. PIPE AND FITTINGS SHALL BE CAREFULLY CLEANED WITH A DRY CLOTH TO REMOVE ALL SAND, MUD, CLAY, OIL OR ICE SO AS TO BE LEFT CLEAN AND DRY. EVERY PRECAUTION SHALL BE TAKEN TO PREVENT FOREIGN MATERIAL FROM ENTERING THE PIPE WHILE IT IS BEING PLACED IN THE LINE. DURING THE LAYING OPERATIONS, NO DEBRIS, TOOLS, CLOTHING OR OTHER MATERIALS SHALL BE PLACED IN THE PIPE. AT TIMES THE PIPE SHALL BE CLOSED BY A WATER TIGHT PLUG OR OTHER MEANS APPROVED BY THE ENGINEER. THIS PROVISION SHALL APPLY DURING THE NOON HOUR AS WELL AS OVERNIGHT. IF WATER IS IN THE TRENCH, THE SEAL SHALL REMAIN IN PLACE UNTIL THE TRENCH IS PUMPED COMPLETELY DRY. NO PIPE SHALL BE LAID IN WATER OR WHEN IN THE OPINION OF THE ENGINEER, TRENCH CONDITIONS ARE UNSUITABLE.

ALL PIPE SHALL BE LAID WITH THE BELL, SOCKET OR COUPLING ENDS FACING THE DIRECTION OF LAYING. PREPARATION OF THE TRENCH BOTTOM AND PLACEMENT OF PIPE SHALL BE CAREFULLY MADE SO THAT WHEN IN FINAL POSITION, THE PIPE IS TRUE TO LINE AND GRADE, CAREFULLY CENTERED, WITH A UNIFORM INVERT.

UNLESS OTHERWISE SPECIFIED, ALL DUCTILE IRON PIPE SHALL BE INSTALLED IN A MANNER TO PROVIDE ELECTRICAL CONTINUITY BY USE OF EITHER BRONZE WEDGES OR APPROVED EQUAL.

5. JOINTING:

IN GENERAL THE METHOD AND MATERIALS TO BE USED IN JOINTING THE PIPE SHALL FOLLOW THE RECOMMENDATIONS OF THE PIPE MANUFACTURER. PRIOR TO THE START OF THE WORK, PIPE LAYERS SHALL BE INSTRUCTED BY A REPRESENTATIVE OF THE PIPE MANUFACTURER, WHO SHALL BE PRESENT AT THE SITE, IN THE PROPER METHOD TO BE USED, AND THE CONTRACTOR SHALL SEE THAT THESE METHODS ARE FOLLOWED.

PREPARATORY TO MAKING PIPE JOINTS, ALL SURFACES OF THE PORTIONS OF THE PIPE TO BE JOINTED OR OF THE FACTORY MADE JOINTING MATERIAL SHALL BE CLEAN AND DRY. NO JOINTING OF THE PIPES WILL BE PERMITTED IN A WET TRENCH OR OTHER EXCAVATION. GASKETS, LUBRICANTS, PRIMERS, ADHESIVES, ETC., SHALL BE INSTALLED AND USED AS RECOMMENDED BY THE PIPE OR JOINT MANUFACTURER'S SPECIFICATIONS. GASKETS AND JOINTING MATERIALS SHALL BE INSPECTED BEFORE INSTALLATION OF THE PIPE AND ANY LOOSE OR IMPROPERLY AFFIXED GASKETS AND JOINTING MATERIALS SHALL BE REMOVED AND REPLACED TO THE SATISFACTION OF THE ENGINEER. THE PIPE SHALL BE ALIGNED WITH THE PREVIOUSLY INSTALLED PIPE, AND THE JOINT PUT TOGETHER. IMMEDIATELY AFTER THE PIPES ARE PUT TOGETHER, THE POSITION OF EACH GASKET AND JOINT SHALL BE INSPECTED TO BE SURE THAT THE JOINT HAS BEEN PROPERLY MADE AND IS TIGHT. IF, WHILE MAKING THE JOINT, THE GASKET OR JOINTING MATERIAL BECOMES LOOSE OR MISPLACED, THE PIPE SHALL BE REMOVED AND THE JOINT REMADE TO THE SATISFACTION OF THE ENGINEER.

THE JOINTS SHALL BE MADE IN A WORKMANLIKE MANNER SO AS TO OBTAIN THE DEGREE OF WATERTIGHTNESS REQUIRED.

IF A PIPE JOINT IS MADE BY PUSHING AGAINST THE OPPOSITE END OF THE ENTERING PIPE, USING A METAL BAR OR OTHER MEANS, THE END OF THE PIPE SHALL BE PROTECTED WITH A BLOCK OF WOOD TO DISTRIBUTE THE STRESSES AND PREVENT DAMAGE TO THE PIPE.

6. BACKFILLING:

CONTRACTOR SHALL NOT BACKFILL WATER MAIN ABOVE 12" COVER MATERIAL UNTIL ENGINEER HAS WITNESSED PIPE INSTALLATION.

UPON COMPLETION OF THE LAYING OF PIPE, BACKFILLING SHALL BE STARTED IMMEDIATELY. BACKFILLING MATERIALS AND COMPACTION SHALL CONFORM TO THE TRENCHING & BACKFILLING DETAIL ON THIS SHEET. DEPTH OF COVER SHALL BE 5'-0", UNLESS OTHERWISE NOTED.

MATERIAL FROM ROCK EXCAVATION MAY BE USED AS BACKFILL ONLY IN TRENCHES IN NON-PAVED AREAS ONLY (UNLESS AUTHORIZED ELSEWHERE BY THE TOWN OF RED HOOK TOWN ENGINEER), AND ONLY IN CONFORMANCE WITH THE FOLLOWING REQUIREMENTS: THE BACKFILL SHALL NOT CONTAIN STONES OR ROCK MORE THAN EIGHT (8) INCHES IN THEIR LARGEST DIMENSION AND BACKFILL SHALL NOT CONTAIN MORE THAN 50 PERCENT ROCK. ALL ROCK SHALL BE UNIFORMLY DISTRIBUTED THROUGHOUT THE BACKFILL; NESTING OF ROCKS WILL NOT BE PERMITTED. MATERIAL FROM ROCK EXCAVATION WHICH IS NOT SUITABLE FOR BACKFILL AS DETERMINED BY THE ENGINEER, SHALL BE REMOVED FROM THE SITE. SUITABLE BACKFILL MATERIAL ACCEPTABLE TO THE ENGINEER SHALL BE SUBSTITUTED FOR THE UNSUITABLE ROCK MATERIAL. REMOVAL OF UNSUITABLE ROCK EXCAVATION MATERIAL AND FURNISHING AN PLACING OF SUITABLE BACKFILL SHALL BE ACCOMPLISHED BY THE CONTRACTOR AT HIS EXPENSE. EXCESS ROCK SHALL BE DISPOSED OF OFF-SITE UNLESS WRITTEN PERMISSION FROM THE PROPERTY OWNER IS GRANTED FOR ON-SITE DISPOSAL OF THE EXCESS ROCK.

7. FLUSHING:

CONTRACTOR SHALL SUBMIT A FLUSHING PLAN FOR REVIEW AND APPROVAL BY THE DCWWA, PRIOR TO ANY WATER USAGE BY THE CONTRACTOR. THOROUGH FLUSHING SHALL BE PERFORMED PRIOR TO HYDROSTATIC TESTING OF THE INSTALLED PIPE IN ORDER TO REMOVE FOREIGN MATERIALS WHICH MAY HAVE ENTERED THE PIPE DURING THE COURSE OF INSTALLATION.

FLUSHING SHALL BE ACCOMPLISHED BY OPENING AND CLOSING VALVES AND HYDRANTS SEVERAL TIMES UNDER MAXIMUM AVAILABLE LINE PRESSURE AND FLOW VELOCITIES. A MINIMUM FLUSHING VELOCITY OF 2.5 fps SHALL BE ACHIEVED. NO FLUSHING DEVICE IS TO BE CONNECTED WITH THE SEWER SYSTEM.

WASTE WATER FROM THE FLUSHING PROCEDURE SHALL NOT BE ALLOWED TO COLLECT OR FLOW ONTO ROADS, DRIVEWAYS OR YARDS. FLUSHING OF LINES SHALL BE PERFORMED ONLY WITH THE APPROVAL OF THE OWNER.

8. VALVES AND VALVE BOXES:

VALVE BOXES SHALL NOT "REST" ON VALVES. VALVES SHALL BE LOCATED AND SET WHERE SHOWN ON THE DRAWINGS.

VALVES AND BOXES SHALL EACH BE SET AND MAINTAINED IN A VERTICAL POSITION. THE POSITION OF THE NUT INSIDE THE BOX SHALL BE SUCH THAT FREE AND COMPLETE ACCESS TO THE NUT CAN BE ACHIEVED WITH A WRENCH.

THE FINISHED ELEVATION OF THE TOP OF THE VALVE BOX, UNLESS OTHERWISE SHOWN ON THE DRAWINGS, SHALL BE SUCH THAT THE TOP IS LEVEL WITH THE SURROUNDING FINAL GRADES. IN THE CASE OF INCOMPLETED GRADING, THE UPPER BOX SECTION AND VALVE SHALL BE PROTECTED BY BARRICADE, BARRELS OR OTHER MARKERS SATISFACTORY TO THE ENGINEER.

9. HYDRANTS:

HYDRANTS SHALL BE LOCATED AND SET APPROXIMATELY WHERE SHOWN ON THE DRAWINGS OR AS ORDERED AND DIRECTED BY THE ENGINEER. HYDRANTS SHALL BE CONNECTED TO THE MAIN BY NECESSARY LENGTH OF PIPE. ALL JOINTS SHALL BE MECHANICAL JOINTS WITH RETAINER GLANDS INSTALLED IN ACCORDANCE WITH MANUFACTURER'S INSTRUCTIONS. HYDRANT VALVES SHALL BE LOCATED AS SHOWN ON THE TYPICAL SECTION ON THE DRAWINGS.

THE HYDRANT SHALL BE SET PLUMB ON A SOLID BASE. CONCRETE REACTION BLOCKING SHALL BE POURED AROUND THE BASE BEARING ON VIRGIN SOIL, TAKING CARE TO KEEP THE DRAIN HOLE UNOBSTRUCTED. THE REMAINDER OF THE BASE SHALL BE PACKED WITH CRUSHED STONE TO PERMIT DRAINAGE OF THE HYDRANT BARREL.

THE HYDRANT SHALL BE SO PLACED THAT THE DISTANCE FROM THE NUT OF THE PUMPER CONNECTION TO THE FINISH GROUND ELEVATION SHALL BE 18" TO 20". EXTENSION SECTIONS SHALL BE USED ONLY WHERE UNKNOWN OR UNUSUAL FIELD CONDITIONS ARE ENCOUNTERED AND ONLY WITH PRIOR APPROVAL BY THE ENGINEER. THE CONTRACTOR SHALL PROVIDE A HYDRANT WITH THE REQUIRED DEPTH OF BURY SO THE HYDRANT MAY BE INSTALLED TO THE PROPER ELEVATION WITHOUT EXTENSIONS.

THE HYDRANT SHALL BE FULLY LUBRICATED USING HYDRANT MANUFACTURER'S LUBRICATING OIL.

HYDRANTS SHALL HAVE TWO COATS OF PAINT WHICH ARE BOTH "RED". THE CONTRACTOR SHALL TOUCH UP ANY DAMAGED, CHIPPED, OR SCRATCHED PAINTED SURFACES ON THE HYDRANT USING PAINT OF THE IDENTICAL MANUFACTURE AND COLOR AS PROVIDED ON THE HYDRANT BY THE MANUFACTURER.

10. SERVICE LINES AND SERVICE CONNECTIONS:

SERVICES SHALL BE LOCATED IN THE FIELD BY THE ENGINEER WITH THE ASSISTANCE OF THE CONTRACTOR AND INSTALLED IN CONFORMANCE WITH THE REQUIREMENTS HERETOFORE SPECIFIED AND IN CONFORMANCE WITH DCWWA SPECS.

SERVICE PIPING RUNS LESS THAN 100 FEET IN LENGTH SHALL BE ONE PIECE. JOINTS ON SERVICE PIPE GREATER THAN 100 FEET IN LENGTH SHALL BE SOLDERED WITH 95-5 TIN-ANTIMONY SOLDER.

SERVICE PIPING SHALL BE INSTALLED FROM THE CORPORATION STOP TO THE INTERIOR OF THE BUILDING OR STRUCTURE AND SHALL TERMINATE ONE (1) FOOT INTO THE OPEN AIR INSIDE THE STRUCTURE. THE EXPOSED END OF THE SERVICE PIPING SHALL BE TEMPORARILY CAPPED.

ALL WORK WITHIN THE BUILDING LINE SHALL BE PERFORMED BY OR UNDER THE DIRECT SUPERVISION OF A LICENSED PLUMBER.

ALL PIPE PENETRATIONS AT THE BUILDING OR STRUCTURE FOUNDATION WALLS SHALL BE SLEEVED WITH 1-1/2 INCH PVC PIPE. THE ANNULAR SPACE BETWEEN THE SLEEVE AND WALL SHALL BE FILLED WITH NON-SHRINK CEMENTOUS GROUT. THE ANNULAR SPACE BETWEEN THE SLEEVE AND PIPE SHALL BE CAULKED WATERTIGHT AT BOTH ENDS OF SLEEVE.

MINIMUM COVER FOR SERVICE PIPE SHALL BE 5'-0" UNLESS OTHERWISE SHOWN ON THE PLANS.

THE SERVICE PIPE SHALL BE PROVIDED WITH A CURB STOP AND BOX WHICH SHALL BE TEMPORARILY SET SO THAT THE TOP WILL BE 4" - 6" ABOVE FINISHED GRADE AND ADJACENT TO THE HOMEOWNER'S PROPERTY LINE. TOP OF THE BOX SHALL BE CAPABLE OF BEING SET FLUSH TO GRADE.

BEFORE BACKFILLING THE CORPORATION STOP SHALL BE TURNED TO THE "ON" POSITION.

SERVICE PIPE AND APPURTENANCES SHALL BE INCLUDED IN AND SUBJECT TO THE HEREINAFTER SPECIFIED TEST FOR PRESSURE, LEAKAGE AND POTABILITY.

THRUST RESTRAINTS:

11. ALL FITTINGS, HYDRANTS, VALVES, ETC., SHALL BE RESTRAINED AS SHOWN ON PLANS AND AS APPROVED BY THE ENGINEER AND THE OWNER OF THE WATER SYSTEM. THE METHOD OF COMBINATION OF METHODS SHALL BE APPROVED BY THE ENGINEER AND THE OWNER OF THE WATER SYSTEM. THE METHOD OR COMBINATION OF METHODS SHALL BE APPROVED BY THE ENGINEER AND ACCEPTED BY THE OWNER. ALL METHODS OF THRUST RESTRAINT SHALL BE DESIGNED AND INSTALLED TO RESIST THE MAXIMUM PRESSURE ON THE SYSTEM.

A) INSTALL THRUST BLOCKS WHERE SHOWN ON THE PLANS OR AS ORDERED BY THE ENGINEER.
B) PROVIDE WOODEN FORMS, ADEQUATELY BRACED, TO DEFINE THRUST BLOCK LIMITS. CONCRETE SHALL BEAR AGAINST UNDISTURBED SOIL AT THE TRENCH OR EXCAVATION WALL.
C) PROVIDE BEARING AREA OF THRUST BLOCK IN ACCORDANCE WITH THE PLANS.
D) INSTALL SO AS NOT TO INTERFERE WITH ANY JOINTS OR JOINTING HARDWARE. IF SUCH CANNOT BE AVOIDED, PLACE 20 MIL POLYETHYLENE SHEETING OVER THE JOINT OR FITTING SO AS TO PREVENT CONCRETE FROM BONDING TO IT.

D. HYDROSTATIC TEST REQUIREMENTS

ALL PIPE LINES AND STRUCTURES SHALL BE MADE AS WATERTIGHT AS POSSIBLE AND THE CONTRACTOR SHALL COMPLY WITH ALL PROVISIONS OF THE SPECIFICATIONS AND ALL REQUIREMENTS OF THE ENGINEER INTENDED TO SECURE WATERTIGHT WORK.

DURING THE PROGRESS OF CONSTRUCTION AND/OR UPON COMPLETION OF THE SAME, PRESSURE, LEAKAGE AND DISINFECTION TESTS SHALL BE MADE ON THE PIPE AND APPURTENANCES. ALL PARTS OF THE WORK INCLUDING HYDRANTS AND SERVICE CONNECTIONS SHALL BE INCLUDED IN THE PRESSURE, LEAKAGE AND DISINFECTION TESTS, THESE TESTS SHALL CONFORM TO THE REQUIREMENTS OF AWWA C600 (LATEST EDITION) (SECTION 4) AND AWWA C651 (LATEST EDITION), AND AS SPECIFIED HEREIN.

PRESSURE TESTS SHALL BE MADE AFTER THE BACKFILL IS COMPLETED, BUT NOT SOONER THAN SEVEN (7) DAYS AFTER THE POURING OF CONCRETE THRUST BLOCKING.

BEFORE APPLYING THE SPECIFIED TEST PRESSURE, AIR SHALL BE EXPELLED COMPLETELY FROM THE PIPE, VALVES AND HYDRANTS. THE CONTRACTOR SHALL INSTALL CORPORATION STOPS AS DIRECTED BY ENGINEER AND AT NO ADDITIONAL COST AT SUCH POINTS AS MAY BE NECESSARY SO THAT THE AIR CAN BE EXPELLED OR ADEQUATE TESTING CAN BE PERFORMED.

THE FILLING OF LINES SHALL BE PERFORMED ONLY WITH THE APPROVAL OF THE OWNER AND THE DCWWA.

EACH VALVED SECTION OF PIPE SHALL BE FILLED WITH WATER SLOWLY AND THE SPECIFIED TEST PRESSURE SHALL BE APPLIED BY MEANS OF A PUMP CONNECTED TO THE PIPE IN A MANNER SATISFACTORY TO THE OWNER. THE SYSTEM SHALL STABILIZE AT THE TEST PRESSURE BEFORE CONDUCTING THE LEAKAGE TEST.

ALL NEWLY LAID PIPE SHALL BE SUBJECTED TO A HYDROSTATIC PRESSURE OF 1-1/2 TIMES WORKING PRESSURE OF SYSTEM, WITH 150 PSI AS MINIMUM TEST PRESSURE. WORKING PRESSURE SHALL BE DETERMINED IN THE FIELD.

THE SECTION UNDER TEST SHALL BE PRESSURIZED TO 155 PSI AND ALLOWED TO "SIT" FOR A PERIOD OF TWO (2) HOURS OR AS ORDERED BY THE ENGINEER. AT NO TIME DURING THE TEST PERIOD SHALL THE PRESSURE BE ALLOWED TO DIMINISH BY MORE THAN 5 PSI FROM THE INITIAL PRESSURE. IN THE EVENT THAT THE PRESSURE IS REDUCED BY MORE THAN 5 PSI, THE LINE SHALL IMMEDIATELY BE REPUMPED USING A HAND PUMP TO THE INITIAL PRESSURE. AT THE END OF THE TEST PERIOD, THE PRESSURE SHALL BE RESTORED TO THE INITIAL PRESSURE. THE TOTAL WATER INJECTED DURING THE TWO HOUR TEST SHALL DETERMINE THE LEAKAGE.

ANY EXPOSED PIPE FITTINGS, VALVES, HYDRANTS AND JOINTS SHALL BE EXAMINED CAREFULLY DURING THE TEST. IN THE EVENT A LEAKAGE TEST FAILS, DAMAGED OR DEFECTIVE PIPE, FITTINGS, VALVES OR HYDRANTS SHALL BE FOUND AND REPAIRED OR REPLACED WITH SOUND MATERIAL AND THE TEST SHALL BE REPEATED UNTIL IT IS SATISFACTORY TO THE OWNER.

NO PIPE INSTALLATION WILL BE ACCEPTED IF THE LEAKAGE IS GREATER THAN THAT DETERMINED BY THE FOLLOWING FORMULA:

$$L = \frac{SD\,(P)^{1/2}}{133{,}200}$$

IN WHICH L IS THE ALLOWABLE LEAKAGE, IN GALLONS PER HOUR; S IS THE LENGTH OF PIPE TESTED, IN FEET; D IS THE NOMINAL DIAMETER OF THE PIPE, IN INCHES; AND P IS THE AVERAGE TEST PRESSURE DURING THE LEAKAGE TEST, IN POUNDS PER SQUARE INCH GAUGE. THIS FORMULA IS BASED ON AN ALLOWABLE LEAKAGE OF 11.65 GPD, PER MILE, PER INCH NOMINAL DIAMETER AT A PRESSURE OF 150 PSI. WHEN TESTING AGAINST CLOSED METAL-SEATED VALVES, AN ADDITIONAL LEAKAGE PER CLOSED VALVE OF 0.0078 GAL/H/IN. OF NOMINAL VALVE SIZE SHALL BE ALLOWED. WHEN HYDRANTS ARE IN THE TEST SECTION, THE TEST SHALL BE MADE AGAINST THE CLOSED HYDRANT.

ACCEPTANCE SHALL BE DETERMINED ON THE BASIS OF ALLOWABLE LEAKAGE. IF ANY TEST OF PIPE LAID DISCLOSES LEAKAGE GREATER THAN SPECIFIED, THE CONTRACTOR SHALL, AT HIS OWN EXPENSE, LOCATE AND MAKE REPAIRS AS NECESSARY UNTIL THE LEAKAGE IS WITHIN THE SPECIFIED ALLOWANCE.

ALL VISIBLE LEAKS ARE TO BE REPAIRED REGARDLESS OF THE AMOUNT OF LEAKAGE.

CONTRACTOR SHALL PERFORM PRESSURE TESTS UNDER THE SUPERVISION OF A PROFESSIONAL ENGINEER, TO ENSURE PROPER TECHNIQUE AND EQUIPMENT FOR EACH TEST TO BE PERFORMED. CONTRACTOR SHALL PRE-TEST THE SYSTEM AND ADVISE ENGINEER OF ALL RESULTS. A FINAL PRESSURE TEST SHALL BE MADE BY THE CONTRACTOR IN THE PRESENCE OF THE ENGINEER AND DCWWA. NO PIPELINE WORK SHALL BE ACCEPTED UNLESS THE PRESSURE TEST IS TOTALLY WITNESSED BY THE ENGINEER AND DCWWA.

E. OPERATING TEST

EACH HYDRANT SHALL BE FULLY OPENED AND CLOSED UNDER SYSTEM WATER PRESSURE AND DRY BARREL HYDRANTS CHECKED FOR PROPER DRAINAGE. ALL CONTROL VALVES SHALL BE FULLY CLOSED AND OPENED UNDER SYSTEM WATER PRESSURE TO ENSURE PROPER OPERATION. ALL OPERTATION TESTS SHALL BE WITNESSED BY THE ENGINEER.

F. DISINFECTION

UPON COMPLETION OF ALL WATER SUPPLY RELATED CONSTRUCTION, ALL MAINS, VALVES, HYDRANTS AND OTHER APPRUTENANCES BUILT UNDER THIS CONTRACT SHALL BE DISINFECTED, FLUSHED AND TESTED FOR BACTERIOLOGICAL QUALITY IN ACCORDANCE WITH AWWA C651, EXCEPT THAT TABLETS SHALL NOT BE USED FOR CHLORINATION. BACTERIAL TESTS SHALL BE BY MEMBRANE FILTER METHOD, NOT PASS/FAIL. THE CONTINUOUS FEED CHLORINATION METHOD SPECIFIED IN SECTION 4.4 OF AWWA C651 SHALL BE USED.

THE CONTRACTOR SHALL FURNISH, AT HIS OWN EXPENSE, AN ADEQUATE SUPPLY OF ALL WATER REQUIRED DURING THE CONSTRUCTION AND TESTING OF THE WORK UNDER THE CONTRACT, PAYING FOR THE EXPENSES AND CHARGES FOR THE SAME, AND INSTALLING AND PAYING FOR A METER IF IT IS REQUIRED. WHEN WORK IS COMPLETED, TEMPORARY WATER CONNECTIONS AND FIXTURES SHALL BE REMOVED BY THE CONTRACTOR.

THE CONTRACTOR SHALL FLUSH AND STERILIZE ALL TEMPORARY SERVICE LINES BEFORE USING TO SUPPLY POTABLE WATER.

THE CONTRACTOR SHALL CONDUCT THE DISINFECTION OF ALL WATER MAINS UNDER THE SUPERVISION OF A PROFESSIONAL ENGINEER AND DCWWA. THE CONTRACTOR SHALL SUBMIT A PROFESSIONAL ENGINEER'S CERTIFICATION TO THE DUTCHESS COUNTY DEPARTMENT OF HEALTH AND TO DCWWA UPON COMPLETION OF THE PRESSURE TESTING AND DISINFECTION.

KIRCHHOFF PROPERTIES

STATE OF NEW YORK · RODNEY E MORRISON · 074104 · LICENSED PROFESSIONAL ENGINEER

#	Date	Revisions:
1.	06.27.14	REVISED PER NEW LAYOUT AND DESIGN
2.	09.05.14	REVISED PER NEW LAYOUT AND DESIGN
3.	09.25.14	SUBMISSION FOR SKETCH ENDORESEMENT
4.	10.10.14	REVISED PER TOWN COMMENTS
5.	01.23.15	REVISED PER TOWN COMMENTS
6.	03.27.15	REVISED PER TOWN COMMENTS
7.	06.05.15	REVISED PER TOWN COMMENTS

LRC GROUP
● Land Planning
● Civil Engineering
● Environmental Services
● Land Surveying
● Landscape Architecture
85 Civic Center Plaza, Suite 103
Poughkeepsie NY 12601
Tel:845.243.2880
Fax:845.265.8175
160 West Street, Suite E
Cromwell, CT 06416
Tel:860.635.2877 Fax:860.635.4226
www.lrcconsult.com
Land Resource Consultants, Inc.
LRC Engineering & Surveying, P.C.
LRC Environmental Services, Inc.
LRC Engineering and Surveying, LLC

WATER DETAILS

HOFFMAN PROPERTY

OLD FARM ROAD
TOWN OF RED HOOK
DUTCHESS COUNTY NEW YORK

Designed	SMC	CAD File	DN12126302
Drawn	SMC	Project No.	12-1263
Checked	KFC	Date	01.16.13
Approved	REM	Scale	NTS

DN-2

X:\Jobs\Jobs 2012\12-1263_Kirchhoff_Hoffman Farm\DWGS\DN12126302.dwg
Layout: DETAIL SHEET 30X42

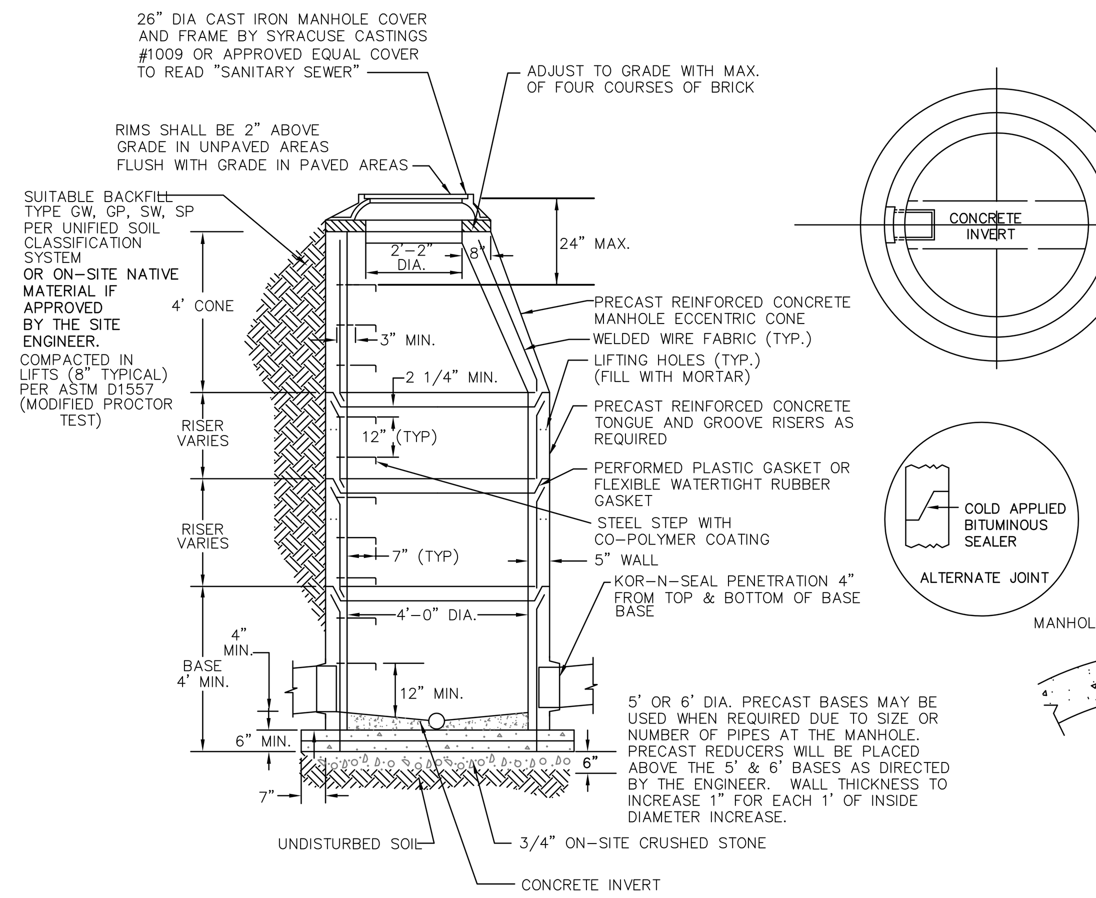

SANITARY MANHOLE
NOT TO SCALE

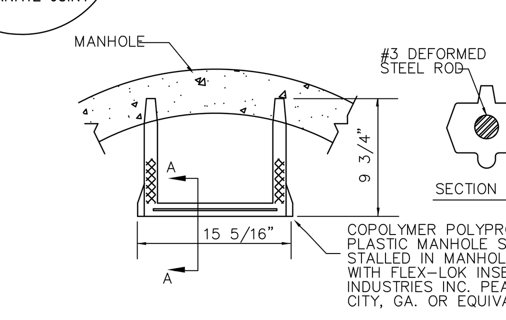

TYPICAL MANHOLE STEP DETAIL
NOT TO SCALE

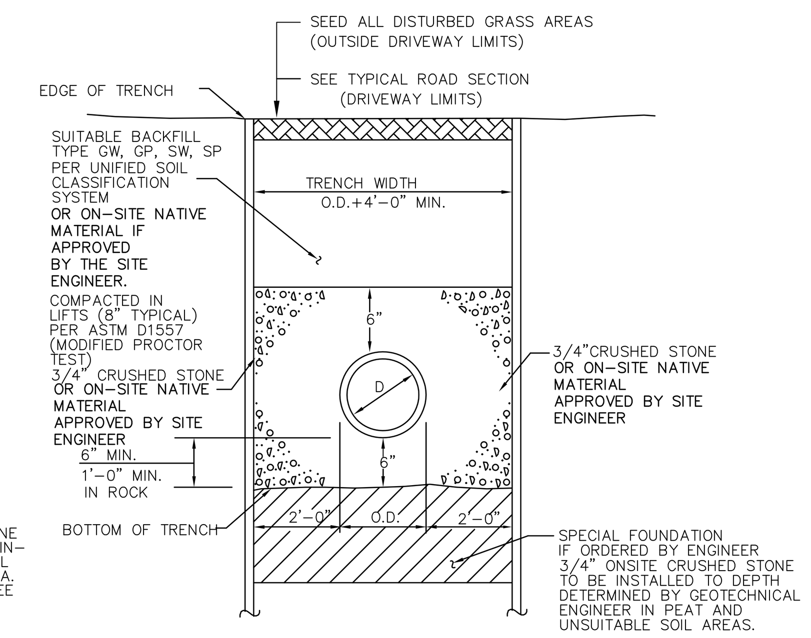

SANITARY SEWER TRENCH SECTION
NOT TO SCALE
NOTE: SEE SANITARY SEWER NOTES FOR ADDITIONAL DETAILS.

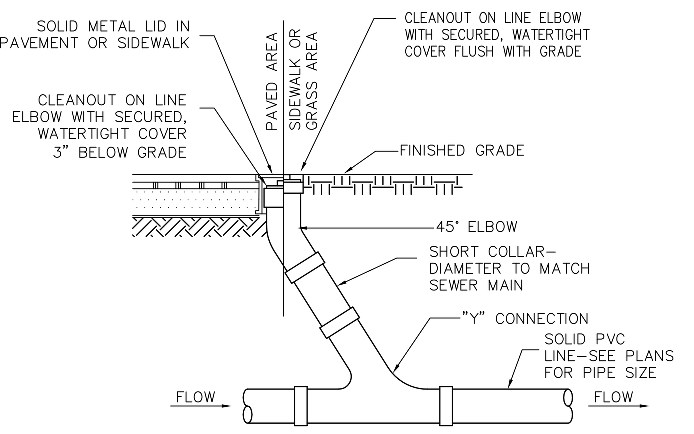

SANITARY SEWER CLEANOUT DETAIL
NOT TO SCALE

NOTES:

1. CLEANOUTS SHALL BE INSTALLED AT 75' INTERVALS OR ANY CHANGE IN DIRECTION.

2. ANY LOCATIONS WITHIN PAVED AREAS SHALL HAVE COVERS THAT ARE H-20 LOAD RATED. ALL COVERS WHETHER IN PAVEMENT OR GRASS SHALL BE LABELED "SEWER".

3. ALL RISERS ARE TO MATCH THE SIZE OF THE SANITARY LINE.

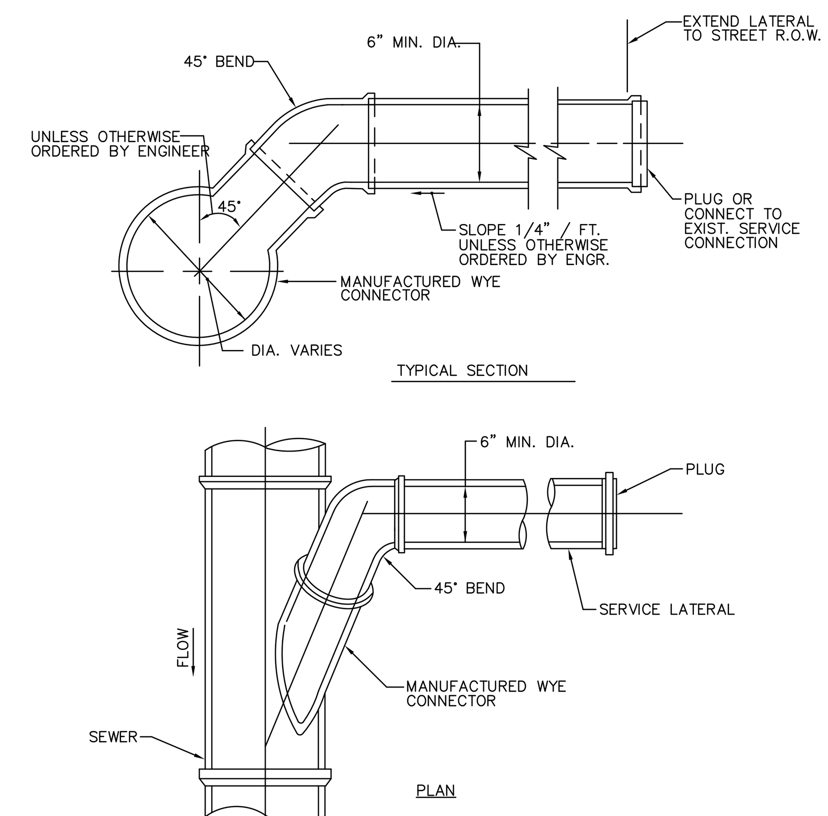

STANDARD SERVICE LATERAL CONNECTION
NOT TO SCALE

SPECIFICATIONS: SANITARY SEWER

SEWER MAINS:
GRAVITY SEWER PIPE SHALL BE PUSH JOINT PVC MEETING THE REQUIREMENTS OF ASTM D3034-SDR35. FORCE MAIN SEWER PIPE SHALL BE PUSH JOINT PVC PRESSURE RATED PIPE CONFORMING TO ASTM D2241-SDR26, PRESSURE RATING 160 PSI MINIMUM. SCHEDULE 80 PVC SHALL BE UTILIZED WHERE INDICATED ON THE PLANS.

ALL PIPE DELIVERED TO THE SITE SHALL BE LABELED BY THE MANUFACTURER INDICATING PIPE DIAMETER, MATERIAL AND STRENGTH CLASS.

MAGNETIC DETECTOR TAPE SHALL BE PLACED OVER FORCE MAIN FOR ITS ENTIRE LENGTH, 18-INCH BELOW FINISHED GRADE. THE TAPE SHALL BE PRINTED WITH LETTER "CAUTION SEWER LINE BELOW" OR SIMILAR INDICATION.

MANHOLES:
MANHOLES SHALL BE STANDARD PRODUCTS AS MANUFACTURED BY LEONARD CONCRETE PRODUCTS OR EQUAL OF THE TYPES AND SIZES AS SHOWN ON THE PLANS. THEY SHALL BE DESIGNED TO WITHSTAND A HIGHWAY H-20 LOADING + 25% IMPACT AND CONFORM TO ASTM C-478, MANHOLES WITH BUTYL RUBBER GASKET JOINTS.

THE EXTERIOR OF ALL CONCRETE STRUCTURES SHALL HAVE TWO (2) COATS OF ASPHALT BASE FOUNDATION COATING AS MANUFACTURED BY TNEMEC OR EQUAL.

MANHOLE STEPS SHALL BE NO. 3 GRADE 60 STEEL REINFORCED POLYPROPYLENE PLASTIC AS MANUFACTURED BY THE FLEX-LOK INSERT, M.A. INDUSTRIES, INC. OR APPROVED EQUAL. STEPS SHALL BE INSTALLED AND ALIGNED IN EACH SECTION SO AS TO FORM A CONTINUOUS LADDER WITH STEPS EQUALLY SPACED AT 12" INCREMENTS, ON CENTER.

FRAMES AND COVERS SHALL BE OF THE TYPES SHOWN ON THE PLANS. THE IRON SHALL BE CAPABLE OF DEVELOPING A TENSILE STRENGTH OF 18,000 POUNDS PER SQUARE INCH, AND SHALL BE ABLE TO WITHSTAND A HIGHWAY H-20 LOADING AND 25% IMPACT.

ALL FRAMES AND COVERS SHALL BE MADE FROM PROPERLY PREPARED PATTERNS, AND SHALL BE SOUND, TRUE, OUT OF WIND, SMOOTH, CLEAN AND FREE FROM BLISTERS, SAND HOLES, SCALES AND ALL DEFECTS. NO PLUGGING OR OTHER STOPPING OF HOLES WILL BE ALLOWED. MANHOLE FRAMES AND COVERS SHALL NOT WEIGH LESS THAN 350 POUNDS. ALL COVERS SHALL HAVE TWO "LIFTING" HOLES ONLY AND HAVE CAST IN LABELS: "SANITARY SEWER" FOR SANITARY SEWER MANHOLES. COVERS WHICH ROCK ON THEIR FRAMES WILL NOT BE ACCEPTED, AND THE CONTRACTOR SHALL, IF NECESSARY, MACHINE OR GRIND COVER IN PLACE TO OBTAIN AN EVEN BEARING. COVERS SHALL FIT IN FRAME WITHOUT BINDING ALONG PERIMETER.

FRAMES SHALL BE SET WITH COURSES OF BRICK OR CONCRETE SPACERS TO SUIT GRADE AS SHOWN ON THE PLANS.

HOUSE SERVICE CONNECTIONS:
HOUSE SERVICE CONNECTIONS SHALL BE CONSTRUCTED OF STANDARD ONE-PIECE WYE FITTINGS AS MANUFACTURED BY THE SAME MANUFACTURER AS THE SEWER PIPE FOR THIS PROJECT.

TESTING
ALL SANITARY SEWERS AND MANHOLES SHALL BE TESTED AS DESCRIBED BELOW AFTER BEING FLUSHED AND BEFORE BEING USED. DEPENDING ON THE GROUNDWATER TABLE ELEVATION, EITHER THE INFILTRATION OR EXFILTRATION METHOD SHALL BE USED. IF THE GROUNDWATER TABLE ELEVATION EXCEEDS THE PIPE AND/OR STRUCTURE INVERT ELEVATION, THE INFILTRATION TEST METHOD SHALL BE USED. ALL OTHER PIPES AND STRUCTURES SHALL BE TESTED BY THE EXFILTRATION METHOD.

1. INFILTRATION TEST:
GROUNDWATER LEAKAGE INTO MANHOLES SHALL BE SUFFICIENT REASON FOR THE CONTRACTOR TO EXPOSE ANY PORTION OF THE MANHOLE FOR A THOROUGH EXAMINATION BY THE ENGINEER, AFTER WHICH THE MANHOLE SHALL BE REPAIRED AND AGAIN TESTED BY THE CONTRACTOR.

THE DOWNSTREAM MANHOLE OF EACH SECTION SHALL BE PLUGGED AT ITS OUTLET, AND FILLED WITH WATER TO A DEPTH AT WHICH A UNIFORM UNOBSTRUCTED FULL DIAMETER WATER LEVEL EXISTS. A 6-HOUR INFILTRATION TEST SHALL THEN BEGIN. INFILTRATION SHALL NOT EXCEED 25 GALLONS PER MILE PER INCH DIAMETER (100 GALLONS/INCH DIAMETER/MILE/DAY). ANY SECTION WITH INFILTRATION EXCEEDING THIS AMOUNT SHALL BE EXPOSED, REPAIRED AND RETESTED, UNTIL SATISFACTORY TEST RESULTS ARE OBTAINED.

2. EXFILTRATION TEST:
AIR TESTING OF SEWERS SHALL BE UTILIZED AS SPECIFIED IN ASTM SPECIFICATION C-828. THE RECOMMENDED MINIMUM TIME REQUIREMENT FOR THE 1.0 PSIG PRESSURE DROP FROM 3.5 PSIG TO 2.5 PSIG, SHALL NOT BE LESS THAN THAT CALCULATED USING THE FOLLOWING FORMULA: TIME (MINUTES) = 1.2 MINUTES/100 FEET FOR 8" DIAMETER PIPE.

REPRESENTATIVE SECTIONS OF SANITARY SEWER SHALL ALSO BE HYDROSTATICALLY TESTED. AFTER PIPES ARE TEMPORARILY SEALED, THE UPSTREAM MANHOLE SHALL BE FILLED WITH WATER TO A DEPTH OF FIVE (5) FEET ABOVE THE TOP OF THE OUTLET PIPE. A 6-HOUR EXFILTRATION TEST SHALL THEN BEGIN. EXFILTRATION SHALL NOT EXCEED 25 GALLONS PER MILE PER INCH DIAMETER (100 GALLONS/INCH DIAMETER/MILE/DAY).

THE AIR TEST METHOD SHALL INCLUDE WATER LEAKAGE TESTS ON MANHOLES. AFTER PIPES ARE TEMPORARILY SEALED, THE MANHOLE SHALL BE FILLED FULL WITH WATER. LEAKAGE FROM THE MANHOLE UNDER TEST SHALL NOT EXCEED 100 GAL./INCH DIAMETER/MILE/DAY.

MANHOLES SHALL ALSO BE SUBJECT TO VACUUM TESTING AS FOLLOWS:

1. THIS TEST METHOD IS ONLY APPLICABLE TO PRECAST CONCRETE MANHOLES.

2. ALL LIFTING HOLES AND EXTERIOR JOINTS SHALL BE FILLED AND POINTED WITH AN APPROVED NON-SHRINKING MORTAR.

3. MANHOLES ARE TO BE TESTED IMMEDIATELY AFTER ASSEMBLY AND BEFORE BACKFILLING. NO STANDING WATER SHALL BE ALLOWED IN THE MANHOLE EXCAVATION WHICH MAY AFFECT THE ACCURACY OF THE TEST.

4. ALL PIPES AND OTHER OPENINGS INTO THE MANHOLE SHALL BE SUITABLY PLUGGED IN SUCH A MANNER AS TO PREVENT DISPLACEMENT OF THE PLUGS WHILE THE VACUUM IS DRAWN.

5. INSTALLATION AND OPERATION OF VACUUM EQUIPMENT AND INDICATING DEVICES SHALL BE IN ACCORDANCE WITH EQUIPMENT SPECIFICATIONS AND INSTRUCTIONS PROVIDED BY THE MANUFACTURER.

6. THE TEST HEAD MAY BE PLACED IN THE CONE SECTION OF THE MANHOLE. THE RIM-CONE JOINT DOES NOT REQUIRE TESTING.

7. A VACUUM OF 10 INCHES OF MERCURY SHALL BE DRAWN. THE TIME FOR THE VACUUM TO DROP TO 9 INCHES OF MERCURY SHALL BE RECORDED.

8. ACCEPTANCE FOR 4 FT. DIAMETER MANHOLES SHALL BE DEFINED AS WHEN THE TIME TO DROP TO 9 INCHES OF MERCURY MEETS OR EXCEEDS THE FOLLOWING:

MANHOLE DEPTH	DIAMETER	TIME TO DROP 1" HG
10 FT OR LESS	4 FT	60 SEC
10 FT TO 15 FT	4 FT	75 SEC
15 FT TO 25 FT	4 FT	90 SEC

9. FOR MANHOLES 5 FT. IN DIAMETER, ADD AN ADDITIONAL 15 SECONDS AND FOR MANHOLES 6 FT. IN DIAMETER, ADD AN ADDITIONAL 30 SECONDS TO THE TIME REQUIRED FOR 4 FT. DIAMETER MANHOLES.

10. IF THE MANHOLE FAILS THE TEST, NECESSARY REPAIRS SHALL BE MADE AND THE VACUUM TEST REPEATED UNTIL THE MANHOLE PASSES THE TEST. AS AN ALTERNATIVE METHOD OF ACCEPTANCE, AND ONLY WITH THE APPROVAL OF THE ENGINEER, THE FAILED MANHOLE MAY BE TESTED IN ACCORDANCE WITH THE STANDARD INFILTRATION/EXFILTRATION TEST AND RATED ACCORDINGLY.

11. IF THE MANHOLE JOINT MASTIC OR GASKET IS DISPLACED DURING THE VACUUM TEST, THE MANHOLE SHALL BE DISASSEMBLED AND THE SEAL REPAIRED.

ANY SECTION WHICH DISCLOSES A WATER OR AIR LOSS RATE GREATER THAN PERMITTED, SHALL BE EXPOSED, REPAIRED AND RETESTED UNTIL SATISFACTORY TEST RESULTS ARE OBTAINED.

3. DEFLECTION TESTING:
DEFLECTION TESTS SHALL BE PERFORMED ON ALL FLEXIBLE PIPE. THE TEST SHALL BE CONDUCTED AFTER THE FINAL BACKFILL HAS BEEN IN PLACE AT LEAST 30 DAYS TO PERMIT STABILIZATION OF THE SOIL-PIPE SYSTEM.

NO PIPE SHALL EXCEED A DEFLECTION OF 5 PERCENT. IF DEFLECTION EXCEEDS 5 PERCENT, REPLACEMENT OR CORRECTION SHALL BE ACCOMPLISHED IN ACCORDANCE WITH THE APPROVED SPECIFICATIONS.

THE RIGID BALL OR MANDREL USED FOR THE DEFLECTION TEST SHALL HAVE A DIAMETER NOT LESS THAN 95 PERCENT OF THE BASE INSIDE DIAMETER OR AVERAGE INSIDE DIAMETER OF THE PIPE DEPENDING ON WHICH IS SPECIFIED IN THE ASTM SPECIFICATION, INCLUDING THE APPENDIX, TO WHICH THE PIPE IS MANUFACTURED. THE PIPE SHALL BE MEASURED IN COMPLIANCE WITH ASTM D 2122 STANDARD TEST METHOD OF DETERMINING DIMENSIONS OF THERMOPLASTIC PIPE AND FITTINGS. THE TEST SHALL BE PERFORMED WITHOUT MECHANICAL PULLING DEVICES.

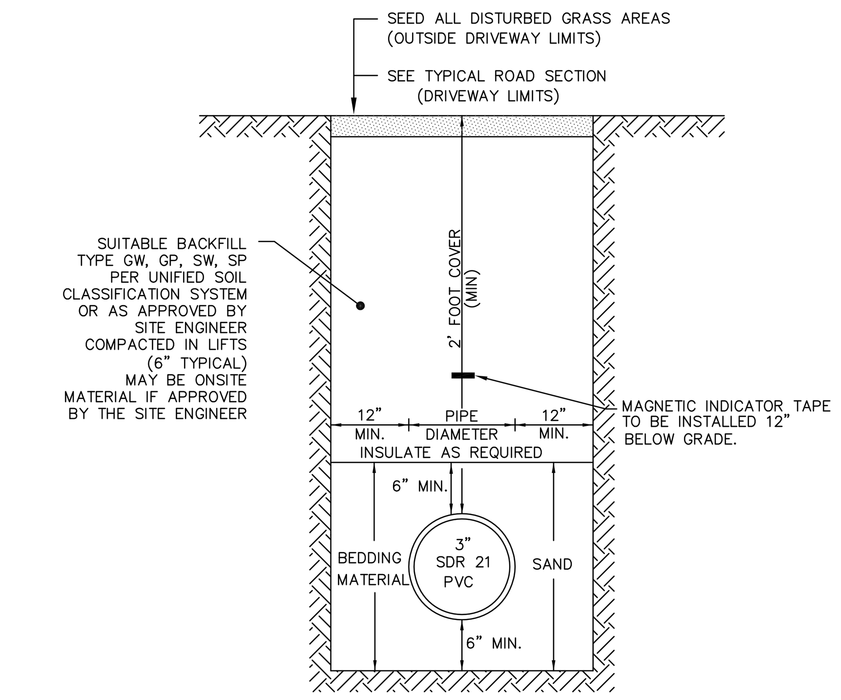

FORCE MAIN TRENCH DETAIL
NOT TO SCALE

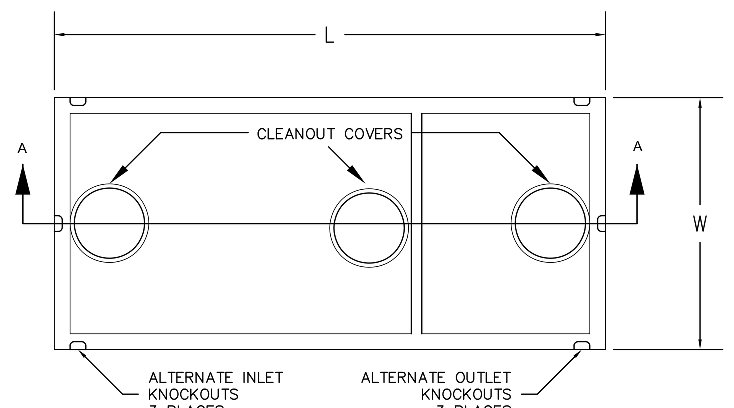

TABULATION CHART											
GALLONS	L	W	H	LL	A	B	C	D	E	F
5000	18'-8"	9'	7'-3"	58"	70"	31"	67"	32"	29"	46"
6000	20'-4"	9'-6"	7'-3"	60"	70"	33"	69"	32"	30"	48"

NOTES:

1. SEPTIC TANK TO BE HEAVY DUTY H-20 LOADED 1,000 GALLON SEPTIC TANK MANUFACTURED BY WOODARD CONCRETE, OR APPROVED EQUAL.

2. PROVIDE A LOCATION STAKE AT EACH BURRIED LID.

3. ALL JOINTS TO BE CAULKED.

4. SEE PLANS FOR INLET/OUTLET PIPE SIZES.

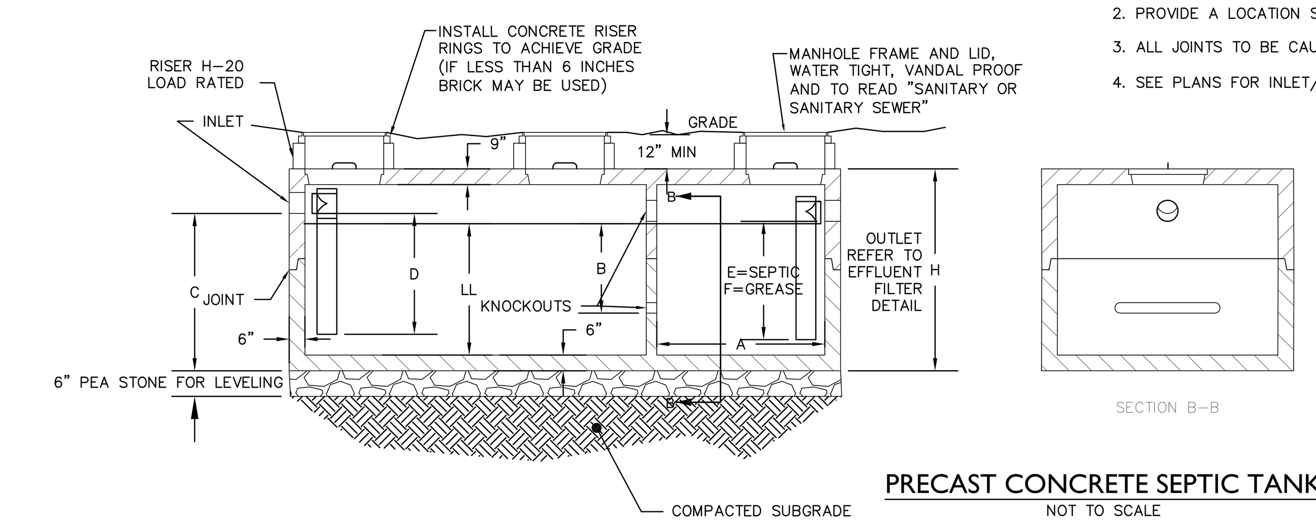

PRECAST CONCRETE SEPTIC TANK
NOT TO SCALE
(ALL SEPTIC TANKS TO BE H-20 LOAD RATED)

NOTES:

1. INSTALL A100-12 ZABEL FILTERS (OR APPROVED EQUAL) ON SEPTIC TANK DISCHARGE LINES TO PUMP CHAMBER

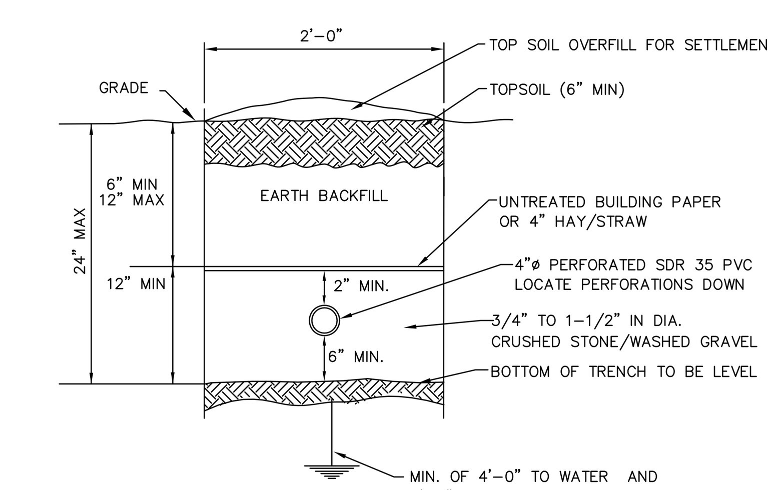

TYPICAL ABSORPTION TRENCH DETAIL
NOT TO SCALE
NOTE: ABSORPTION TRENCHES TO BE SPACED 6 FEET ON CENTER.

OPERATION GUIDELINES
A-B 1&3 OPEN, 2&4 CLOSED
A-C 1&4 OPEN, 2&3 CLOSED
B-C 2&4 OPEN, 1&3 CLOSED

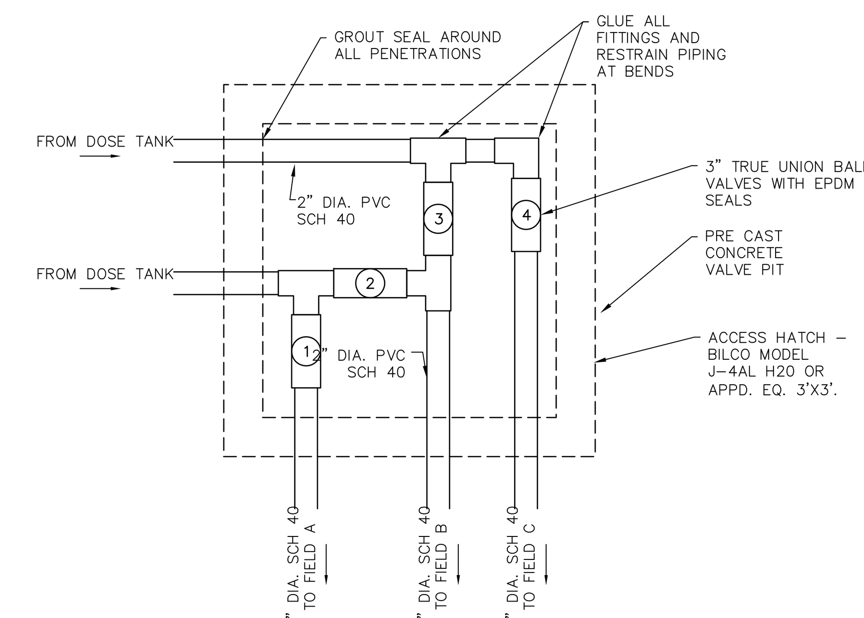

THREE SYSTEM VALVE DISTRIBUTION BOX
NOT TO SCALE

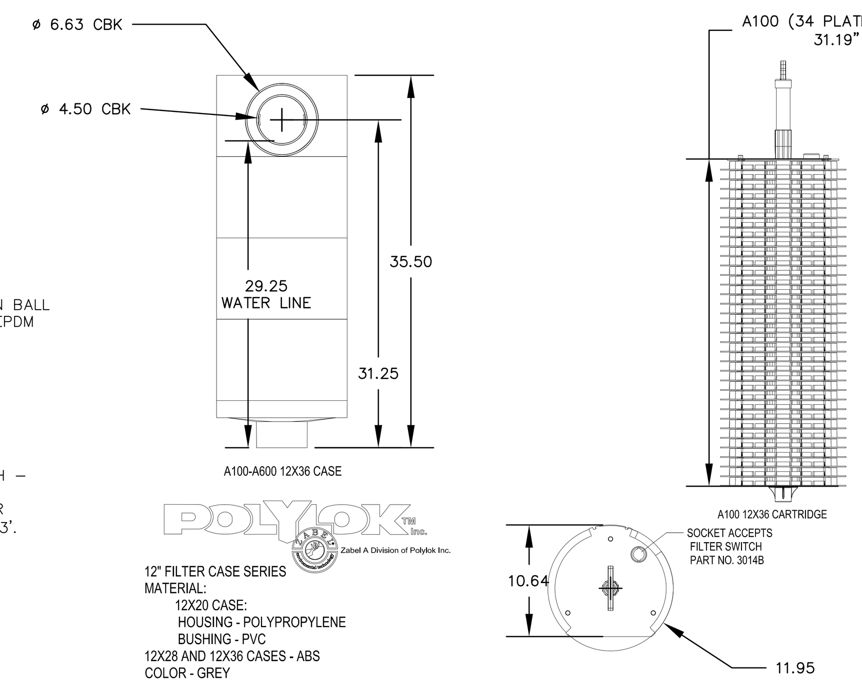

NOTE:

1. INSTALL ZABEL FILTER ON SECOND ROW OF SEPTIC TANKS.

ZABEL FILTER DETAIL
NOT TO SCALE

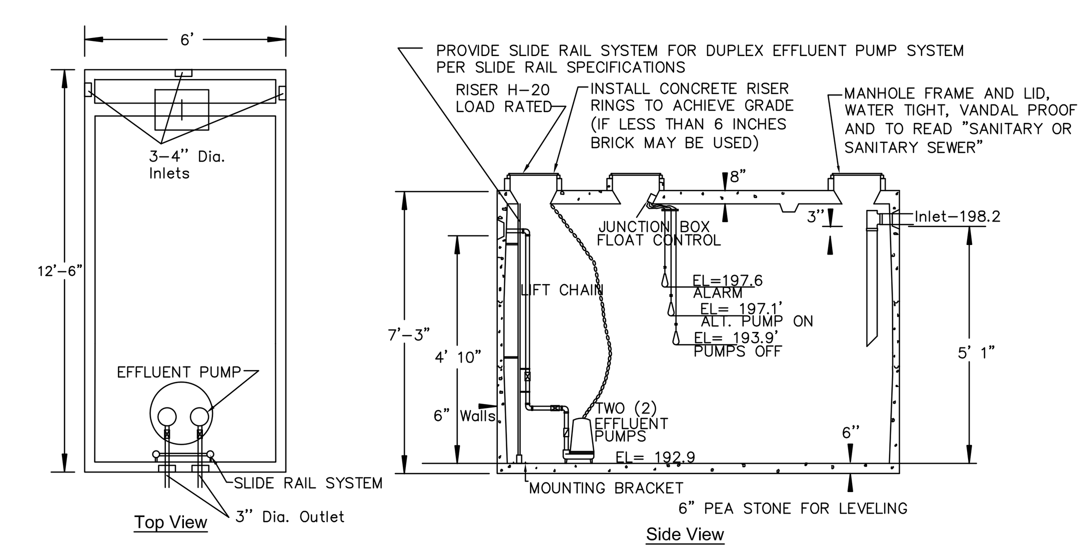

NOTE:
1. THE PRECAST CONCRETE PUMP CHAMBER SHALL ACCOMMODATE H-20 WHEEL LOADS. THE WALL, BASE, AND TOP THICKNESS SHALL BE VERIFIED BY THE PRECAST MANUFACTURER FOR THE SITE CONDITIONS SHOWN ON THESE PLANS. DEPTH OF GROUNDWATER TO BE VERIFIED AT THE TIME OF CONSTRUCTION.

2. PUMPS TO BE 2 HP MYERS MW SERIES PUMPS OR APPROVED EQUAL.

3. PROVIDE CONFINED SPACE WARNING PLATE ON MANHOLE LID. WARNING PLATE SIGN FROM SAFETY SIGN.COM ITEM#E1355 OR APPROVED EQUAL.

4. LOCATIONS OF CONTROL PANEL FOR LOSS OF PUMP CONTROL SHALL BE INSTALLED IN THE MILLS ATHLETIC CENTER MECHANICS ROOM. CONTROL PANEL SHALL BE EQUIPED WITH A DOSE COUNTER OR A DOSE COUNTER SHALL BE INSTALLED AND MOUNTED NEXT TO THE CONTROL PANEL. THE CONTROL PANEL SHALL BE EQUIPED WITH A VISUAL AND AUDIBLE ALARM.

5. PUMP CHAMBER FLOATS ARE TO BE SET TO PROVIDE A DOSE OF 1375 GALLONS AS INDICATED IN THE APPROVED ENGINEERS REPORT.

6. PUMPS SHALL BE SET TO AUTOMATICALLY ALTERNATE WITH THE PUMPS TURNING ON AT THE PUMP ON, PUMPS SHALL SHUT OFF AT PUMPS OFF, SECOND PUMP SHALL TURN ON AND ALARM SHALL SOUND IF AND WHEN ALARM LEVEL IS REACHED.

2,000 GALLON PRECAST PUMPING CHAMBER DETAIL
NOT TO SCALE

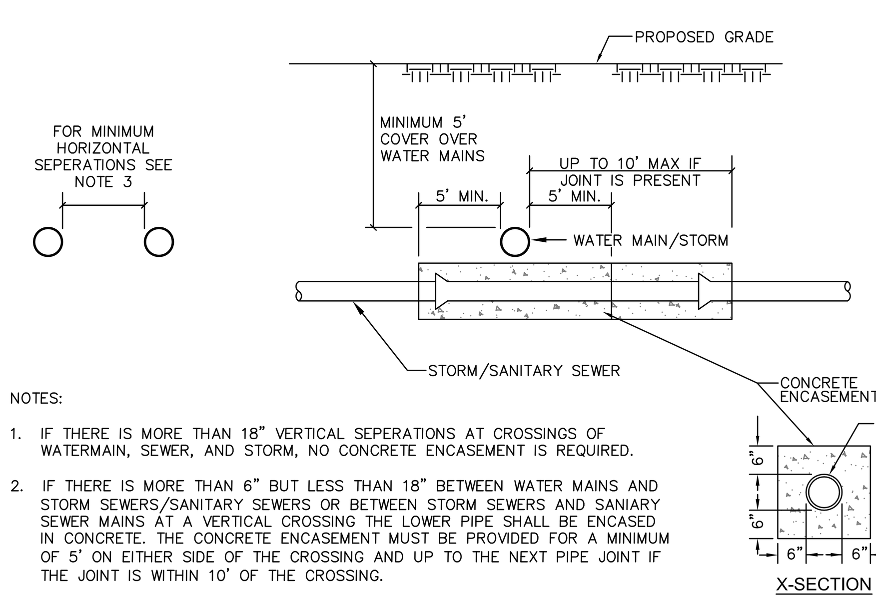

NOTES:

1. IF THERE IS MORE THAN 18" VERTICAL SEPERATIONS AT CROSSINGS OF WATERMAIN, SEWER, AND STORM, NO CONCRETE ENCASEMENT IS REQUIRED.

2. IF THERE IS MORE THAN 6" BUT LESS THAN 18" BETWEEN WATER MAINS AND STORM SEWERS/SANITARY SEWERS OR BETWEEN STORM SEWERS AND SANIARY SEWER MAINS AT A VERTICAL CROSSING THE LOWER PIPE SHALL BE ENCASED IN CONCRETE. THE CONCRETE ENCASEMENT MUST BE PROVIDED FOR A MINIMUM OF 5' ON EITHER SIDE OF THE CROSSING AND UP TO THE NEXT PIPE JOINT IF THE JOINT IS WITHIN 10' OF THE CROSSING.

3. THE SEWER AND WATER LINES MUST MEET THE FOLLOWING HORIZONTAL SEPERATION REQUIRMENTS OR IT MUST BE ENCASED FOR THE ENTIRE LENGTH WHERE THESE SEPERATIONS ARE NOT MET;

-WATER MAINS MUST BE 10 FEET FROM SEWER LINES, MANHOLES, CATCH BASINS OR STORM LINES.
-SANITARY MAINS MUST BE 10 FEET FROM ANY WATER LINES, CATCH BASINS, OR STORM LINES.
-SEWER LINES MUST BE 10 FEET FROM PROPERTY LINES UNLESS IT IS A LOCATION WHERE A PRIVATE SEWER COLLECTION SYSTEM MEETS A MUNICIPAL SYSTEM.
-SEWER LINES MUST BE 50 FEET FROM ANY WELLS.
-SEWER LINES MUST BE 25 FEET FROM SURFACE WATERS.
-SEWER LINES 25 FEET FROM STORMWATER INFILTRATION, STORMWATER MANAGEMENT PRACTICES, OR OPEN DRAINAGE DITCHES.
-SEWER LINES MUST BE 25 FEET FROM CULVERT OPENINGS.

WATER MAIN/SEWER/STORM
CONCRETE ENCASEMENT
NOT TO SCALE
(REQUIRED IF SEPARATION REQUIREMENTS CANNOT BE MET)

KIRCHHOFF PROPERTIES

#	Date	Revisions:
1.	06.27.14	REVISED PER NEW LAYOUT AND DESIGN
2.	09.05.14	REVISED PER NEW LAYOUT AND DESIGN
3.	09.25.14	SUBMISSION FOR SKETCH ENDORESEMENT
4.	10.10.14	REVISED PER TOWN COMMENTS
5.	01.23.15	REVISED PER TOWN COMMENTS
6.	03.27.15	REVISED PER TOWN COMMENTS
7.	06.05.15	REVISED PER TOWN COMMENTS

LRC GROUP
• Land Planning
• Civil Engineering
• Environmental Services
• Land Surveying
• Landscape Architecture
85 Civic Center Plaza, Suite 103
Poughkeepsie NY 12601
Tel:845.243.2880
Fax:845.265.8175
160 West Street, Suite E
Cromwell, CT 06416
Tel:860.635.2877 Fax:860.635.4226
www.lrcconsult.com
Land Resource Consultants, Inc.
LRC Engineering & Surveying, P.C.
LRC Environmental Services, Inc.
LRC Engineering and Surveying, LLC

STATE OF NEW YORK · RODNEY E MORRISON · LICENSED PROFESSIONAL ENGINEER · 074194

SEWER DETAILS

HOFFMAN PROPERTY
OLD FARM ROAD
TOWN OF RED HOOK
DUTCHESS COUNTY NEW YORK

Designed	SMC	CAD File	DN12126303	DN-3
Drawn	SMC	Project No.	12-1263	
Checked	KFC	Date	01.16.13	
Approved	REM	Scale	NTS	Sheet 26 of 28

X:\Jobs\Jobs 2012\12-1263_Kirchhoff_Hoffman Farm\DWGS\DN12126303.dwg
Layout: DETAIL SHEET 30X42

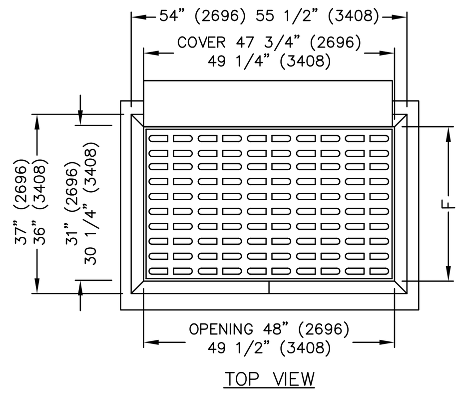

NOTES:

1. SEE GRADING AND UTILITY PLAN TO IDENTIFY CURB OR CURBLESS TYPE GRATES
2. CATCH BASIN SHALL BE PRECAST CONCRETE. DESIGNED FOR H-20 VEHICULAR LOADING AND 25% IMPACT.
3. FRAME AND COVER SHALL BE DESIGNED FOR HS20-44 VEHICULAR LOADING AND 25 % IMAPCT
4. CONCRETE CATCH BASIN CASTING CLEAR OPENING DIMENSION MUST MATCH FRAME AND GRATE. CLEAR OPENING DIMENSION FOR H-20 VEHICULAR LOADING.
5. CATCH BASINS HAVING A DEPTH GREATER THAN 48" FROM FINISHED SURFACE TO THE TOP OF THE CONCRETE BASE SHALL BE PROVIDED WITH STEPS.
6. BACKFILL USING SELECT MATERIAL, COMPACTED IN 6" LIFTS.
7. SUMP SHALL BE 24".

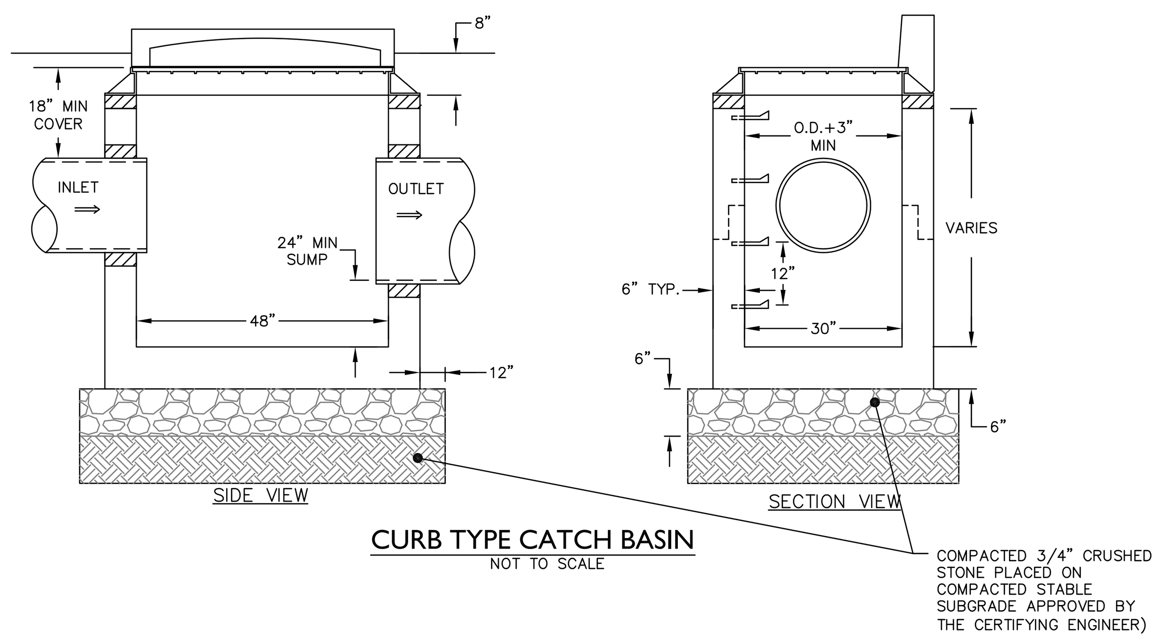

CURB TYPE CATCH BASIN
NOT TO SCALE

NOTE:
1. MANHOLE SHALL BE PRECAST CONCRETE AND DESIGNED FOR H20 VEHICULAR LOADING.
2. FRAME AND GRATE SHALL BE DESIGNED FOR H20 VEHICULAR LOADING.
3. DOT APPROVED STRAIGHT SIDED CAST FRAME WITH SOLID COVER.
4. COVER BY SYRACUSE CASTING MODEL 1004 OR APPROVED EQUAL.

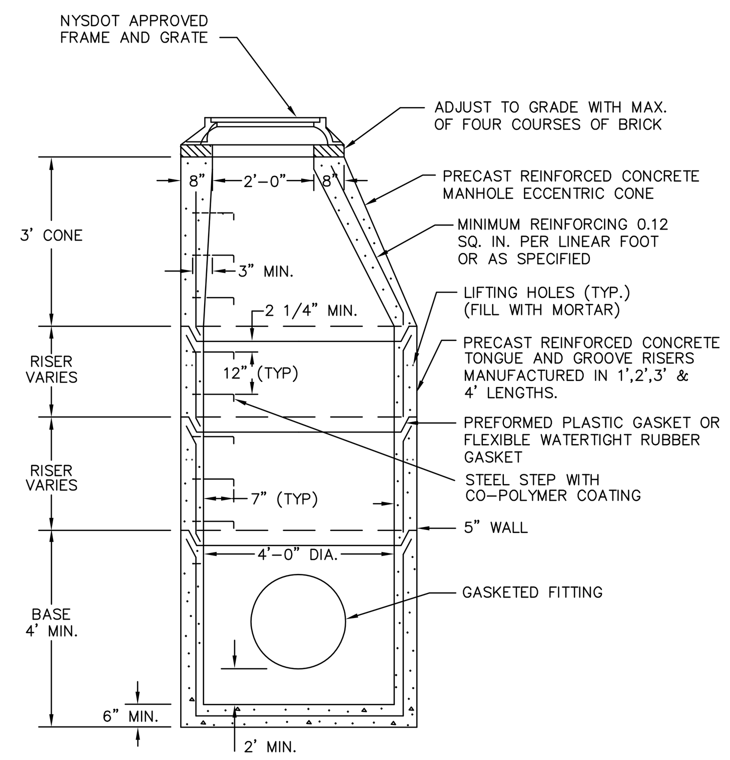

5' OR 6' DIA. PRECAST BASES MAY BE USED WHEN REQUIRED DUE TO SIZE OR NUMBER OF PIPES AT THE MANHOLE. PRECAST REDUCERS WILL BE PLACED ABOVE THE 5' & 6' BASES AS DIRECTED BY THE ENGINEER. WALL THICKNESS TO INCREASE 1" FOR EACH 1' OF INSIDE DIAMETER INCREASE.

PRECAST STORM MANHOLE
NOT TO SCALE

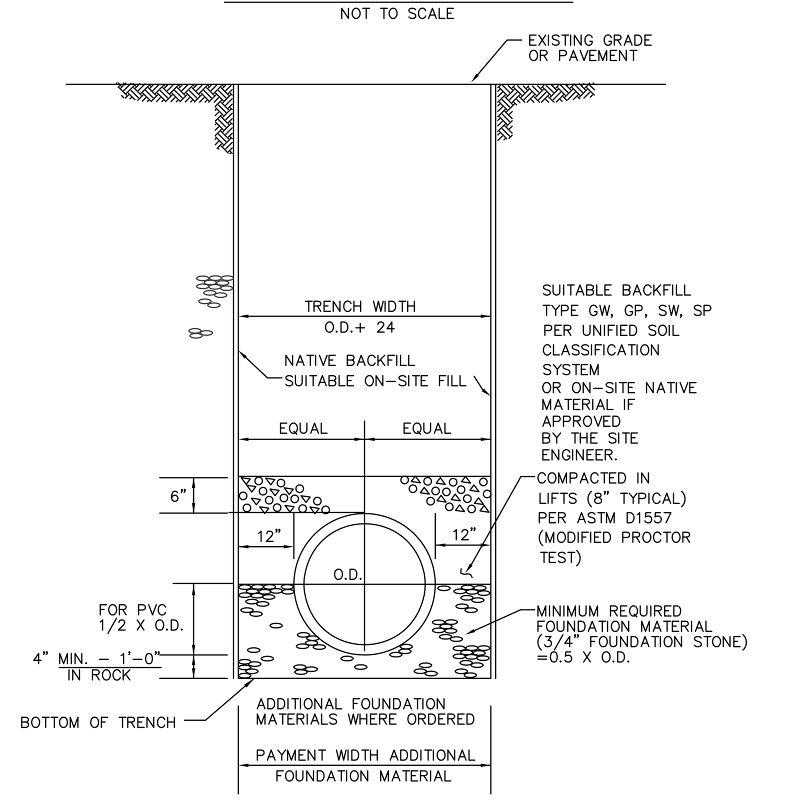

TYPICAL STORM SEWER TRENCH SECTION
NOT TO SCALE

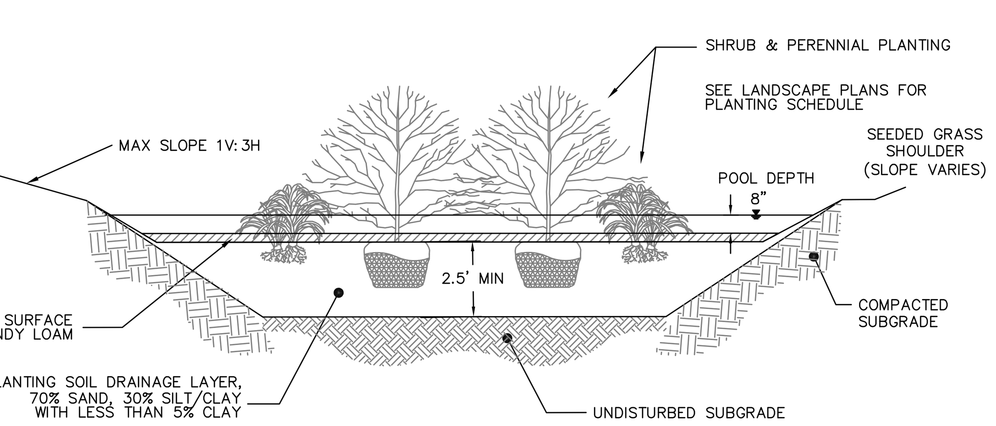

BIO-RETENTION AREA DETAIL
NOT TO SCALE

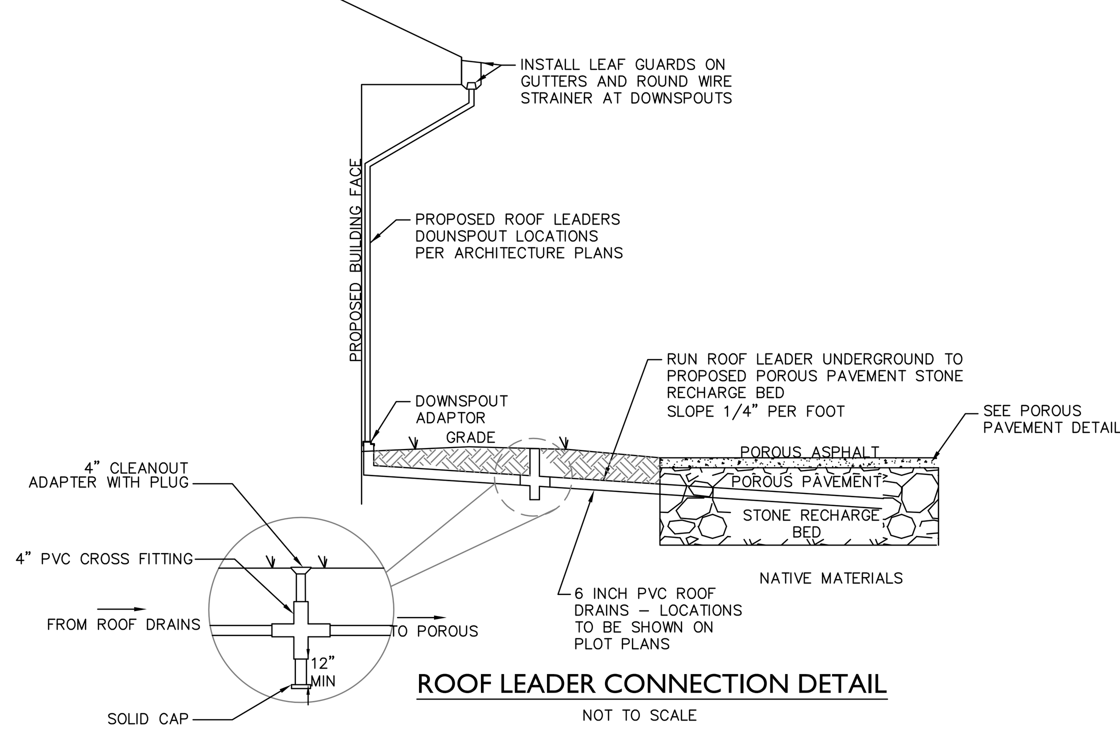

ROOF LEADER CONNECTION DETAIL
NOT TO SCALE

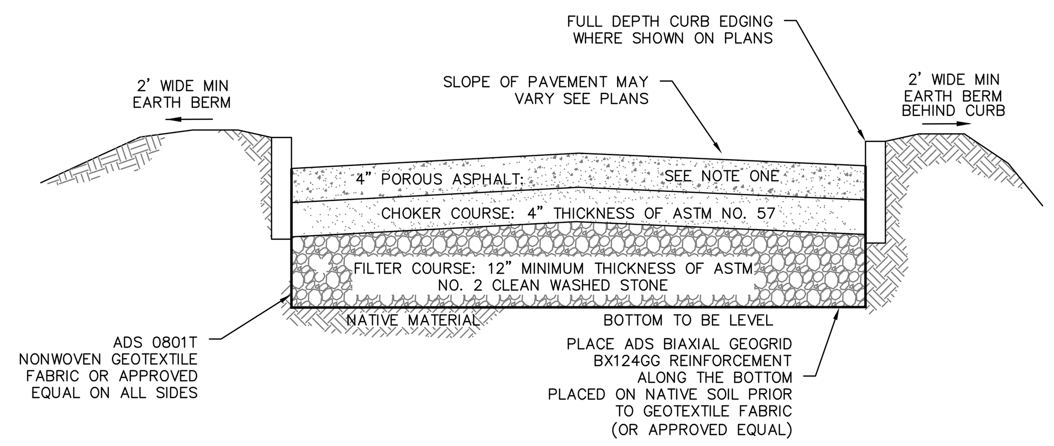

POROUS PAVEMENT CONSTRUCTION GUIDELINES

1. PAVEMENT SPEC PER NAPA SERIES 131 OR NYSDOT APPROVED EQUAL
AGGREGATE MIX:

3/4" (19 mm)	100%
1/2" (12.5 mm)	85–100%
3/8" (9.5 mm)	55–75%
#4 (4.75 mm)	10–25%
#8 (2.36 mm)	5–10%
#200 (0.075 mm)	2–4%

AIR VOIDS BY ASTM D3203 MIN 16%
ASPHALT CONTENT 5.75% TO 6% BY WEIGHT OF TOTAL MIX
DRAINDOWN OF 0.3 % MAXIMUM IN ACCORDANCE WITH ASTM D6390-05
USE NEAT ASPHALT BINDER MODIFIED WITH ELASTOMETRIC POLYMER TO PRODUCE BINDER MEETING THE REQUIREMENTS OF PG-76-22. THE ELASTIC POLYMER SHALL BE STYREME-BUTADIENE-STYRENE (SBS), OR APPROVED EQUAL, APPLIED AT A RATE OF 3 % BY TOTAL WEIGHT OG THE BINDER. THE COMPOSITION MATERIAL SHALL BE THOROUGHLY BLENDED AT THE ASPHALT REFINERY OR TERMINAL PRIOR TO BEING LOADED INTO THE TRANSPORT VEHICLE. THE POLYMER MODIFIED BINDER SHALL BE HEAT AND STORAGE STABLE.

ADD HYDRATED LIME AT A DOSAGE RATE OF 1.0% BY WEIGHT OF THE TOTAL DRY AGGREGATE TO MIXES CONTAINING GRANITE. HYDRATED LIME SHALL MEET THE REQUIREMENTS OF ASTM C 977. THE ADDITIVE MUST BE ABLE TO PREVENT THE SEPARATION OF THE ASPHALT BINDER FROM THE AGGREGATE AND ACHIEVE A REQUIRED TENSILE STRENGTH RATIO (TSR) OF AT LEAST 80% OF THE ASPHALT MIX.

CHOKER COURSE:
(ASTM 57-CLEAN WASHED)

1.5" (37mm)	100%
1" (25 mm)	95–100%
1/2" (12.5 mm)	25–60%
#4 (4.75 mm)	0–10%
#8 (2.36 mm)	0–5%

FILTER COURSE:
(ASTM NO. 2-CLEAN WASHED)

3" (75 mm)	100%
2.5" (63 mm)	90–100%
2" (50 mm)	35–70%
1.5" (37 mm)	0–15%
3/4" (12.5 mm)	0–5%

THE CONTRACTOR SHALL PROVIDE SUBMITTALS FOR EACH STONE COURSE, FILTER FABRIC, GEO GRID, AND THE POROUS PAVEMENT MIX. THE SUBMITTALS MUST BE APPROVED BY THE SITE ENGINEER PRIOR TO THE START OF CONSTRUCTION.

2. BASE OF INFILTRATION BED TO BE INSTALLED LEVEL. SURFACE PAVEMENT ELEVATION TO VARY PER GRADING PLAN. ADJUST FILTER COURSE LEVEL TO ACHIEVE CHANGE IN GRADE AS DIRECTED BY SITE ENGINEER.

3. THE SUBGRADE CANNOT BE OVERLY COMPACTED WITH THE INCLUSION OF FINE PARTICULATES. FOLLOW THE INSTALLATION GUIDELINES ON THE PLANS AND THOSE OUTLINED IN THE NYSDEC STORMWATER DESIGN MANUAL.

4. WEATHER CONDITIONS AT THE TIME OF INSTALLATION CAN AFFECT THE FINAL PRODUCT. EXTREMELY HIGH OR LOW TEMPERATURES SHOULD BE AVOIDED DURING CONSTRUCTION OF PERVIOUS ASPHALT AND CONCRETE PAVEMENTS. TEMPERATURE AT THE TIME OF POROUS PAVEMENT INSTALLATION MUST BE GREATER THAN 50 DEGREES AND LESS THAN 90 DEGREES.

5. AREAS FOR POROUS PAVEMENT SYSTEMS SHALL BE CLEARLY MARKED BEFORE ANY SITE WORK BEGINS TO AVOID SOIL DISTURBANCE AND COMPACTION DURING CONSTRUCTION.

6. IF AREAS CANNOT BE AVOIDED DURING THE CONSTRUCTION OF THE SURROUNDING AREAS OR THE EXCAVATION FOR THE INSTALLATION OF THE STONE RECHARGE BED THE CONTRACTOR SHOULD DE-COMPACT THE EXISTING SUBBASE PER THE DESIGN ENGINEER'S SPECIFICATIONS.

7. PERVIOUS PAVEMENT AND OTHER INFILTRATION PRACTICES SHOULD BE INSTALLED TOWARD THE END OF THE CONSTRUCTION PERIOD. UPSTREAM CONSTRUCTION SHALL BE COMPLETED AND STABILIZED BEFORE CONNECTION TO POROUS PAVEMENT SYSTEM. A DENSE AND VIGOROUS VEGETATIVE COVER SHALL BE ESTABLISHED OVER ANY CONTRIBUTING PERVIOUS DRAINAGE AREAS BEFORE RUNOFF CAN BE ACCEPTED INTO THE FACILITY.

8. SUBSURFACE AREA SHOULD BE EXCAVATED TO PROPOSED DEPTH. EXISTING SUBGRADE SHALL NOT BE COMPACTED OR SUBJECT TO EXCESSIVE CONSTRUCTION EQUIPMENT PRIOR TO PLACEMENT OF GEOTEXTILE AND STONE BED. WHERE EROSION OF SUBGRADE HAS CAUSED ACCUMULATION OF FINE MATERIALS AND/OR SURFACE PONDING, THIS MATERIAL SHALL BE REMOVED WITH LIGHT EQUIPMENT AND THE UNDERLYING SOILS SCARIFIED TO A MINIMUM DEPTH OF 6 INCHES WITH A YORK RAKE OR EQUIVALENT AND LIGHT TRACTOR.

9. PLACE GEOTEXTILE AND RECHARGE BED AGGREGATE IMMEDIATELY AFTER APPROVAL OF SUBGRADE PREPARATION TO PREVENT ACCUMULATION OF DEBRIS OR SEDIMENT. PREVENT RUNOFF AND SEDIMENT FROM ENTERING THE STORAGE BED DURING THE PLACEMENT OF THE GEOTEXTILE AND AGGREGATE BED.

10. PLACE GEOTEXTILE IN ACCORDANCE WITH MANUFACTURER'S STANDARDS AND RECOMMENDATIONS. ADJACENT STRIPS OF FILTER FABRIC SHALL OVERLAP A MINIMUM OF 16 INCHES. FABRIC SHALL BE SECURED AT LEAST 4 FEET OUTSIDE OF BED. THIS EDGE STRIP SHOULD REMAIN IN PLACE UNTIL ALL BARE SOILS CONTIGUOUS TO BEDS ARE STABILIZED AND VEGETATED. AS THE SITE IS FULLY STABILIZED, EXCESS GEOTEXTILE CAN BE CUT BACK TO THE EDGE OF THE BED.

11. INSTALL DRAINAGE PIPES IF REQUIRED, AS SHOWN ON PLANS.

12. PLACE STONE AGGREGATE FOR STONE RECHARGE BEDS, TAKING CARE NOT TO DAMAGE THE FILTER FABRIC. AGGREGATE SHOULD BE DUMPED AT THE EDGE OF THE BED AND AND PLACED IN LAYERS OF 6 TO 8 INCHES USING CLEAN TRACK EQUIPMENT. COMPACT EACH LIFT WITH A SINGLE PASS OF A LIGHT ROLLER. (DO NOT USE VIBRATION) INSTALL AGGREGATE TO GRADES INDICATED ON THE DRAWINGS.

13. THE POROUS PAVEMENT LAYER IS TO BE INSTALLED AS ONE FOUR INCH LIFT USING TRACK PAVERS. FOLLOW NYSDOT SPECIFICATIONS FOR OPEN-GRADED ASPHALT MIX PLACEMENT. THE ASPHALT MUST BE COMPACTED WITH TWO TO FOUR PASSES OF A TEN TON STATIC ROLLER.

14. THE CONTRACTOR MUST PROVIDE AN INDEPENDENT LABORATORY TO PROVIDE A DENSITY GAUGE OPERATOR. THE DENSITY GAUGE OPERATOR MUST TEST THE IN PLACE DENSITY TO ENSURE A COMPACTED TARGET DENSITY OF 81% OF THE MIXTURE MAXIMUM THEORETICAL DENSITY. PERFORM A MINIMUM OF ONE DENSITY GAUGE READING FOR EVERY 200 FEET. THE ACCEPTABLE IN PLACE DENSITY GUAGE READING AT EACH LOCATION WILL BE BETWEEN 95% AND 105% OF THE TARGET DENSITY.

15. AFTER FINAL ROLLING, TRAFFIC MUST BE RESTRICTED FOR THE FIRST 24 HOURS.

16. THE CONTRACTOR IS TO PERFORM A POROSITY TEST 24 HOURS AFTER PLACEMENT. PERFORM A MINIMUM OF 3 POROSITY TESTS AT LOCATIONS DETERMINED BY THE SITE ENGINEER. PERFORM THE TEST BY APPLYING WATER AT A RATE OF 5 GALLONS PER MINUTE FROM A HOSE FOR A MINIMUM OF 3 MINUTES. ALL WATER SHALL INFILTRATE WITHOUT FORMING PUDDLES OR SURFACE WATER. THE TEST SHALL BE MONITORED BY THE SITE ENGINEER.

POROUS ASPHALT PAVEMENT DETAIL
NOT TO SCALE

INSTALLATION OF POROUS PAVEMENT MUST BE INSTALLED IN ACCORDANCE WITH NYSDOT ITEM 420.50030004 "POROUS ASPHALT PAVEMENT SPECIFICATIONS"

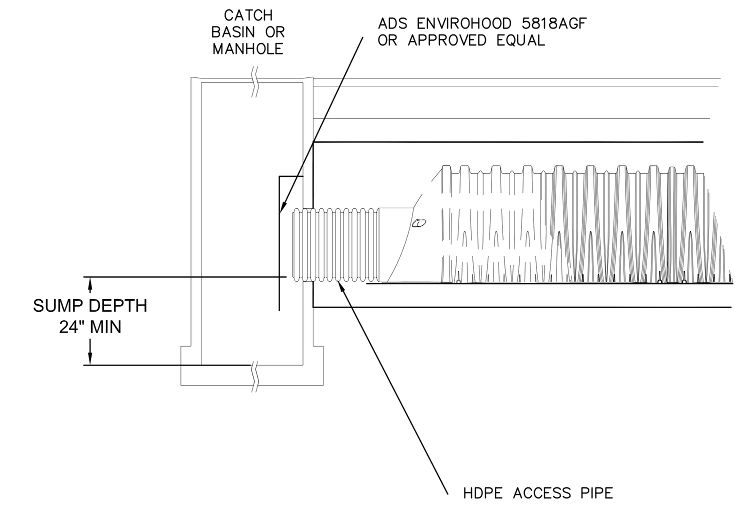

NOTE: HOODS TO BE PROVIDED AT ALL CATCH BASIN OUTLET LOCATIONS

CATCH BASIN HOOD DETAIL
NOT TO SCALE

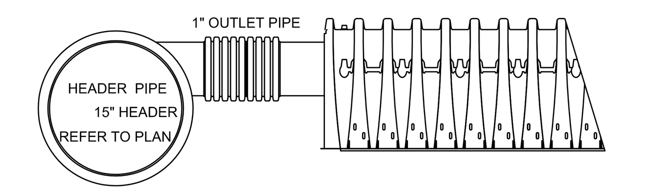

NOTE:
REFER TO PLAN FOR OUTLET MANIFOLD/HEADER PIPE DIMENSIONS AND INVERT EVLEVATIONS.

ECCENTRIC OUTLET HEADER CROSS SECTION
NOT TO SCALE

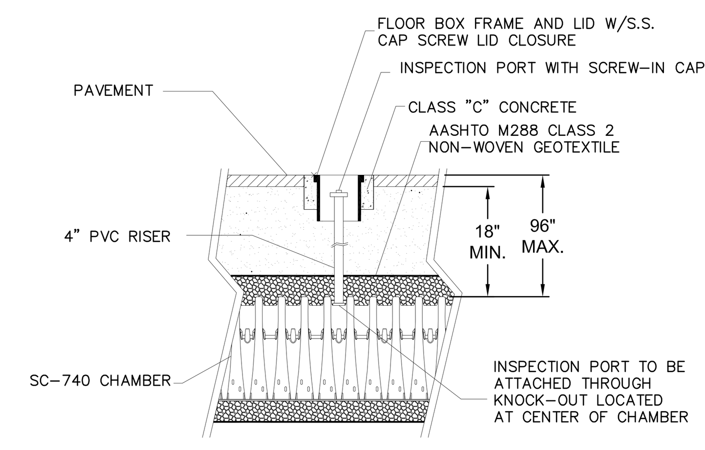

FOR STORMTECH INFORMATION CALL 1-888-892-2694
INSPECTION PORT TO BE CENTERED ON END UNIT OF EACH ISOLATOR ROW, SEE PLANS

INSPECTION PORT DETAIL
NOT TO SCALE

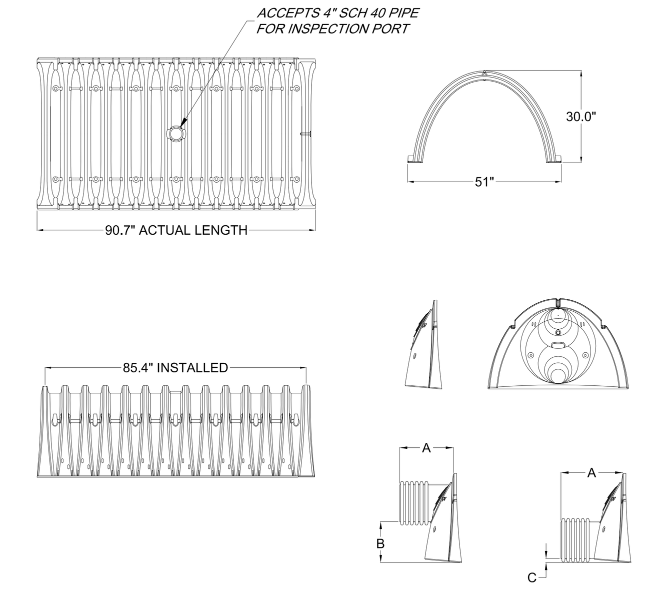

NOMINAL CHAMBER SPECIFICATIONS
SIZE (W x H x INSTALLED LENGTH) - 51.0" x 30.0" x 85.4"
CHAMBER STORAGE - 45.9 CUBIC FEET
MINIMUM INSTALLED STORAGE - 74.9 CUBIC FEET
WEIGHT - 75 LBS.

STUBS AT TOP OF END CAP FOR PARTS NUMBERS ENDING WITH "T"

STUBS AT BOTTOM OF END CAP FOR PARTS NUMBERS ENDING WITH "B"

PART #	CHAMBER	PIPE SIZE	A	B	C
SC740EPE06T	SC-740	6 in (150 mm)	10.90 in (277 mm)	18.50 in (470 mm)	N/A
SC740EPE06B	SC-740	6 in (150 mm)	10.90 in (277 mm)	N/A	0.50 in (13 mm)
SC740EPE08T	SC-740	8 in (200 mm)	12.20 in (310 mm)	16.50 in (419 mm)	N/A
SC740EPE08B	SC-740	8 in (200 mm)	12.20 in (310 mm)	N/A	0.60 in (15 mm)
SC740EPE10T	SC-740	10 in (250 mm)	13.40 in (340 mm)	14.50 in (368 mm)	N/A
SC740EPE10B	SC-740	10 in (250 mm)	13.40 in (340 mm)	N/A	0.70 in (18 mm)
SC740EPE12T	SC-740	12 in (300 mm)	14.70 in (373 mm)	12.50 in (318 mm)	N/A
SC740EPE12B	SC-740	12 in (300 mm)	14.70 in (373 mm)	N/A	1.20 in (30 mm)
SC740EPE15T	SC-740	15 in (375 mm)	18.40 in (467 mm)	9.00 in (229 mm)	N/A
SC740EPE15B	SC-740	15 in (375 mm)	18.40 in (467 mm)	N/A	1.30 in (33 mm)
SC740EPE18T	SC-740	18 in (450 mm)	19.70 in (500 mm)	5.00 in (127 mm)	N/A
SC740EPE18B	SC-740	18 in (450 mm)	19.70 in (500 mm)	N/A	1.60 in (41 mm)
* SC740EPE24B	SC-740	24 in (600 mm)	18.50 in (470 mm)	N/A	0.10 in (3 mm)

NOTE: ALL DIMENSIONS ARE NOMINAL

ALL STUBS, EXCEPT FOR THE SC740EPE24B ARE PLACED AT BOTTOM OF END CAP SUCH THAT THE OUTSIDE DIAMETER OF THE STUB IS FLUSH WITH THE BOTTOM OF THE END CAP. FOR ADDITIONAL INFORMATION CONTACT STORMTECH AT 1-888-892-2694.

* FOR THE SC740EPE24B THE 24" STUB LIES BELOW THE BOTTOM OF THE END CAP APPROXIMATELY 1.75". BACKFILL MATERIAL SHOULD BE REMOVED FROM BELOW THE N-12 STUB SO THAT THE FITTING SETS LEVEL.

SC-740 TECHNICAL SPECIFICATIONS
NOT TO SCALE

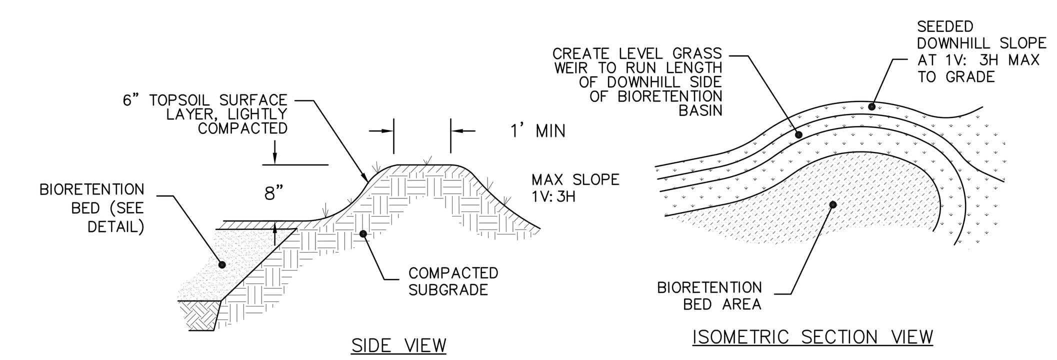

BIO-RETENTION OVERFLOW DETAIL
NOT TO SCALE

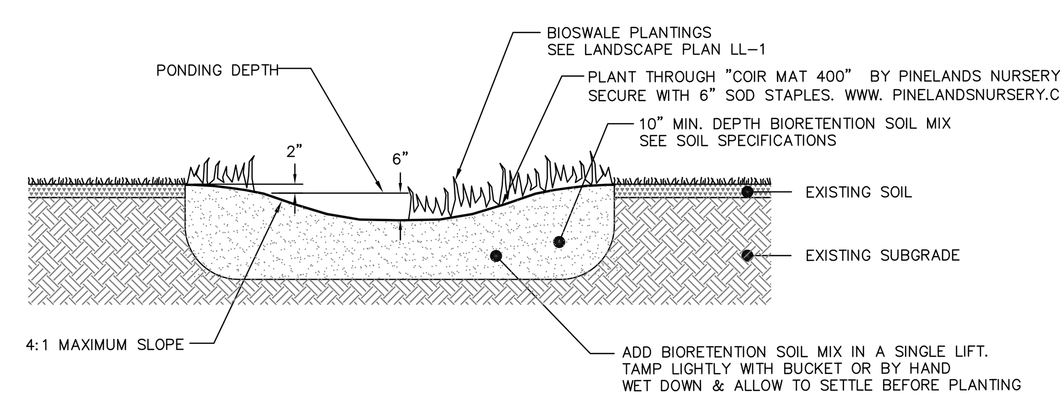

BIOSWALE DETAIL
NOT TO SCALE

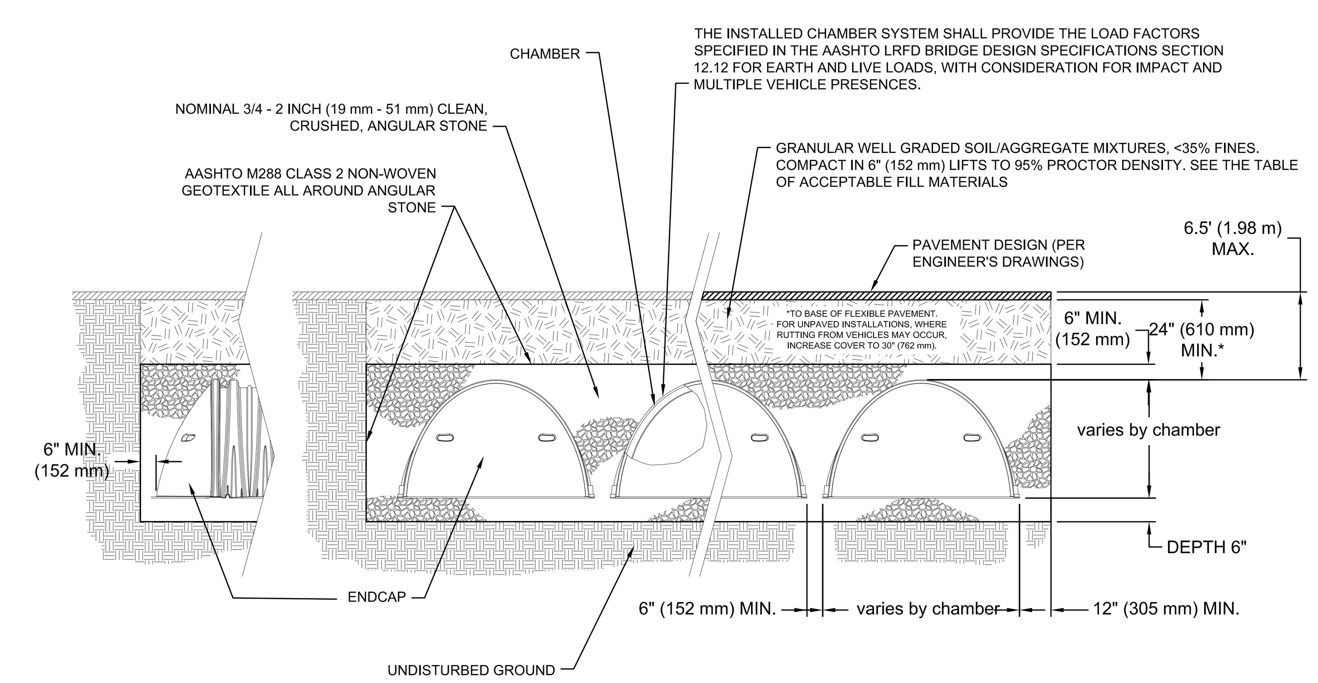

CHAMBER TYPICAL CONSTRUCTION SECTION
NOT TO SCALE

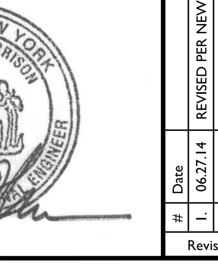

KIRCHHOFF PROPERTIES

#	Date	Revisions:
1.	06.27.14	REVISED PER NEW LAYOUT AND DESIGN
2.	09.05.14	REVISED PER NEW LAYOUT AND DESIGN
3.	09.25.14	SUBMISSION FOR SKETCH ENDORESEMENT
4.	10.10.14	REVISED PER TOWN COMMENTS
5.	01.23.15	REVISED PER TOWN COMMENTS
6.	03.27.15	REVISED PER TOWN COMMENTS
7.	06.05.15	REVISED PER TOWN COMMENTS

LRC GROUP
- Land Planning
- Civil Engineering
- Environmental Services
- Land Surveying
- Landscape Architecture

85 Civic Center Plaza, Suite 103
Poughkeepsie NY 12601
Tel:845.243.2880
Fax:845.265.8175

160 West Street, Suite E
Cromwell, CT 06416
Tel:860.635.2877 Fax:860.635.4226
www.lrcconsult.com

Land Resource Consultants, Inc.
LRC Engineering & Surveying, P.C.
LRC Environmental Services, Inc.
LRC Engineering and Surveying, LLC

STORMWATER DETAILS

HOFFMAN PROPERTY

OLD FARM ROAD
TOWN OF RED HOOK
DUTCHESS COUNTY NEW YORK

Designed	SMC	CAD File	DN12126304
Drawn	SMC	Project No.	12-1263
Checked	KFC	Date	01.16.13
Approved	REM	Scale	NTS

DN-4

X:\Jobs\Jobs 2012\12-1263_Kirchhoff_Hoffman Farm\DWGS\DN12126304.dwg
Layout: DETAIL SHEET 30X42

SILT FENCE

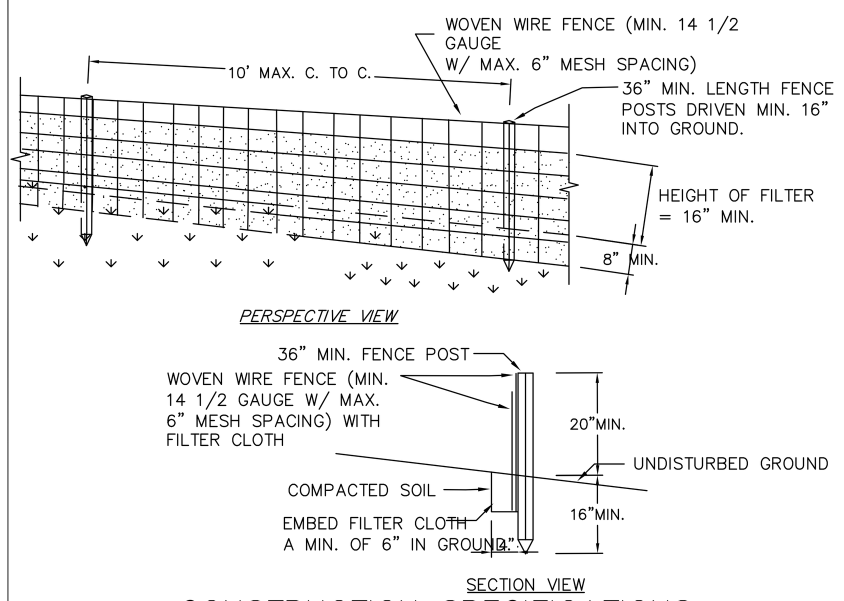

CONSTRUCTION SPECIFICATIONS

1. WOVEN WIRE FENCE TO BE FASTENED SECURELY TO FENCE POSTS WITH WIRE TIES OR STAPLES. POSTS SHALL BE STEEL EITHER "T" OR "U" TYPE OR HARDWOOD.
2. FILTER CLOTH TO BE FASTENED SECURELY TO WOVEN WIRE FENCE WITH TIES SPACED EVERY 24" AT TOP AND MID SECTION. FENCE SHALL BE WOVEN WIRE, 12 1/2 GAUGE, 6" MAXIMUM MESH OPENING.
3. WHEN TWO SECTIONS OF FILTER CLOTH ADJOIN EACH OTHER THEY SHALL BE OVER-LAPPED BY SIX INCHES AND FOLDED. FILTER CLOTH SHALL BE EITHER FILTER X, MIRAFI 100X, STABILINKA T140N, OR APPROVED EQUIVALENT.
4. PREFABRICATED UNITS SHALL BE GEOFAB, ENVIROFENCE, OR APPROVED EQUIVALENT.
5. MAINTENANCE SHALL BE PERFORMED AS NEEDED AND MATERIAL REMOVED WHEN "BULGES" DEVELOP IN THE SILT FENCE.

U.S. DEPARTMENT OF AGRICULTURE NATURAL RESOURCES CONSERVATION SERVICE NEW YORK STATE DEPARTMENT OF ENVIRONMENTAL CONSERVATION NEW YORK STATE SOIL & WATER CONSERVATION COMMITTEE	SILT FENCE

FILTER FABRIC DROP INLET PROTECTION

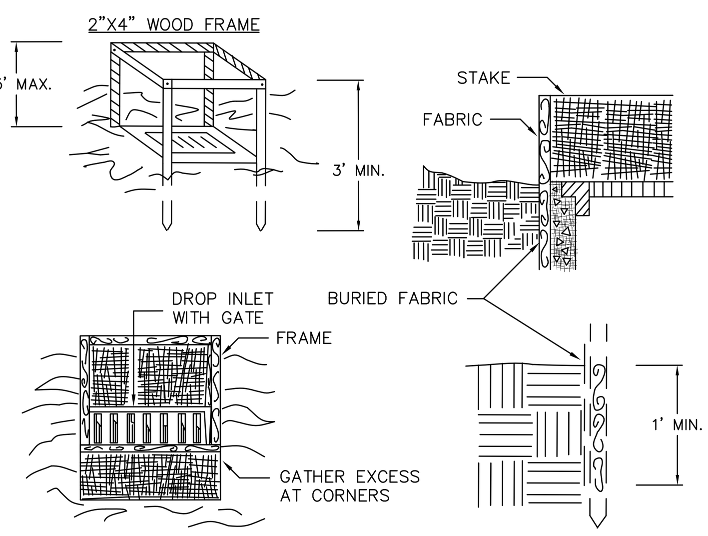

CONSTRUCTION SPECIFICATIONS

1. FILTER FABRIC SHALL HAVE AN EOS OF 40-85. BURLAP MAY BE USED FOR SHORT TERM APPLICATIONS.
2. CUT FABRIC FROM A CONTINUOUS ROLL TO ELIMINATE JOINTS. IF JOINTS ARE NEEDED THEY WILL BE OVERLAPPED TO THE NEXT STAKE.
3. STAKE MATERIALS WILL BE STANDARD 2" x 4" WOOD OR EQUIVALENT. METAL WITH A MINIMUM LENGTH OF 3 FEET.
4. SPACE STAKES EVENLY AROUND INLET 3 FEET APART AND DRIVE A MINIMUM 18 INCHES DEEP. SPANS GREATER THAN 3 FEET MAY BE BRIDGED WITH THE USE OF WIRE MESH BEHIND THE FILTER FABRIC FOR SUPPORT.
5. FABRIC SHALL BE EMBEDDED 1 FOOT MINIMUM BELOW GROUND AND BACKFILLED. IT SHALL BE SECURELY FASTENED TO THE STAKES AND FRAME.
6. A 2" x 4" WOOD FRAME SHALL BE COMPLETED AROUND THE CREST OF THE FABRIC FOR OVER FLOW STABILITY.

MAXIMUN DRAINAGE AREA 1 ACRE

U.S. DEPARTMENT OF AGRICULTURE NATURAL RESOURCES CONSERVATION SERVICE NEW YORK STATE DEPARTMENT OF ENVIRONMENTAL CONSERVATION NEW YORK STATE SOIL & WATER CONSERVATION COMMITTEE	FILTER FABRIC DROP INLET PROTECTION

STABILIZED CONSTRUCTION ENTRANCE

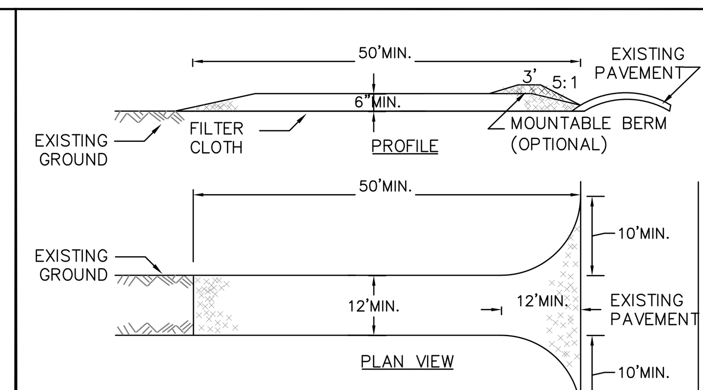

CONSTRUCTION SPECIFICATIONS

1. STONE SIZE – USE 1"–4" ANGULAR STONE, OR RECLAIMED OR RECYCLED CONCRETE EQUIVALENT.
2. LENGTH – NOT LESS THAN 50 FEET (EXCEPT ON A SINGLE RESIDENCE LOT WHERE A 30 FOOT MINIMUM LENGTH WOULD APPLY).
3. THICKNESS – NOT LESS THAN SIX (6) INCHES.
4. WIDTH – TWELVE (12) FOOT MINIMUM, BUT NOT LESS THAN THE FULL WIDTH AT POINTS WHERE INGRESS OR EGRESS OCCURS. TWENTY–FOUR (24) FOOT IF SINGLE ENTRANCE TO SITE.
5. FILTER CLOTH – WILL BE PLACED OVER THE ENTIRE AREA PRIOR TO PLACING OF STONE.
6. SURFACE WATER – ALL SURFACE WATER FLOWING OR DIVERTED TOWARD CON-STRUCTION ENTRANCES SHALL BE PIPED ACROSS THE ENTRANCE. IF PIPING IS IMPRACTICAL, A MOUNTABLE BERM WITH 5:1 SLOPES WILL BE PERMITTED.
7. MAINTENANCE – THE ENTRANCE SHALL BE MAINTAINED IN A CONDITION WHICH WILL PREVENT TRACKING OR FLOWING OF SEDIMENT ONTO PUBLIC RIGHTS–OF–WAY, ALL SEDIMENT SPILLED, DROPPED, WASHED OR TRACTED ONTO PUBLIC RIGHTS–OF–WAY MUST BE REMOVED IMMEDIATELY.
8. WHEN WASHING IS REQUIRED, IT SHALL BE DONE ON A AREA STABILIZED WITH STONE AND WHICH DRAINS INTO AN APPROVED SEDIMENT TRAPPING DEVICE.
9. PERIODIC INSPECTION AND NEEDED MAINTENANCE SHALL BE PROVIDED AFTER EACH RAIN.

U.S. DEPARTMENT OF AGRICULTURE NATURAL RESOURCES CONSERVATION SERVICE NEW YORK STATE DEPARTMENT OF ENVIRONMENTAL CONSERVATION NEW YORK STATE SOIL & WATER CONSERVATION COMMITTEE	STABILIZED CONSTRUCTION ENTRANCE

LEVEL SPREADER

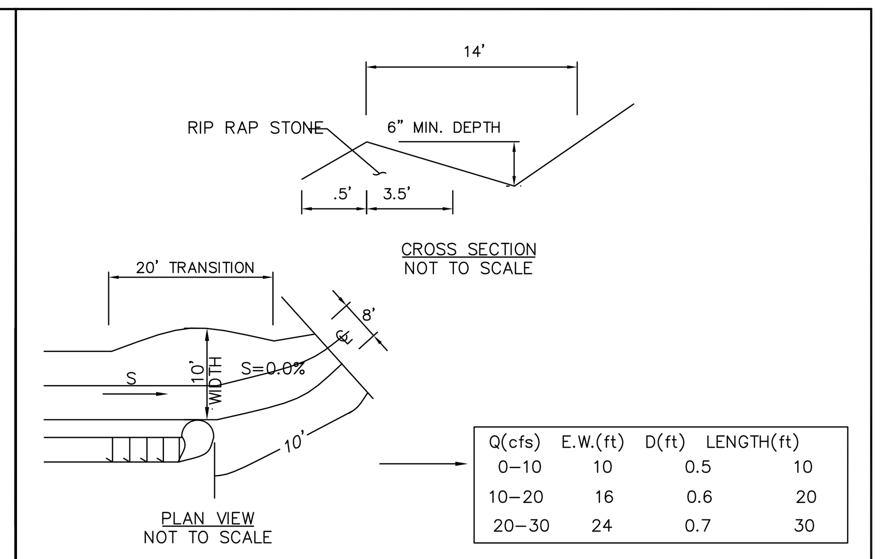

Q(cfs)	E.W.(ft)	D(ft)	LENGTH(ft)
0–10	10	0.5	10
10–20	16	0.6	20
20–30	24	0.7	30

CONSTRUCTION SPECIFICATIONS

1. THE MATTING SHOULD BE A MINIMUM OF 4FT. WIDE EXTENDING 6 INCHES OVER THE LIP AND BURIED 6 INCHES DEEP IN A VERTICAL TRENCH ON THE LOWER EDGE. THE UPPER EDGE SHOULD BUTT AGAINST SMOOTHLY CUT SOD AND BE SECURELY HELD IN PLACE WITH CLOSELY SPACED HEAVY DUTY WIRE STAPLES AT LEAST 12 INCHES IN LENGTH.
2. ENSURE THAT THE LIP IS LEVEL TO UNIFORMLY SPREAD DISCHARGE.
3. THE LIP SHALL BE CONSTRUCTED ON UNDISTURBED SOIL NOT FILL.
4. A 20 FOOT TRANSITION SECTION WILL BE CONSTRUCTED FROM THE DIVERSION CHANNEL TO THE SPREADER TO SMOOTHLY BLEND THE DIFFERENT DIMENSION AND GRADES.
5. THE RUNOFF DISCHARGE WILL BE OUTLETED ONTO A STABILIZED VEGETATED SLOPE NOT EXCEEDING 10%.
6. SEED AND MULCH THE DISTURBED AREA IMMEDIATELY AFTER CONSTRUCTION.

U.S. DEPARTMENT OF AGRICULTURE NATURAL RESOURCES CONSERVATION SERVICE NEW YORK STATE DEPARTMENT OF ENVIRONMENTAL CONSERVATION NEW YORK STATE SOIL & WATER CONSERVATION COMMITTEE	LEVEL SPREADER

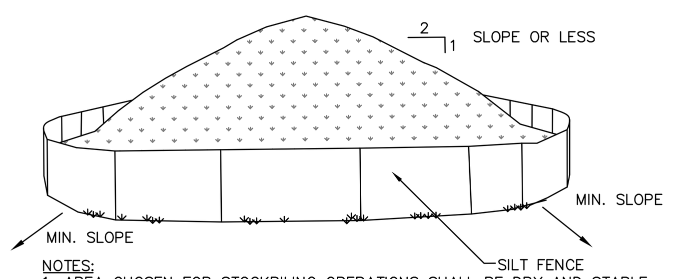

NOTES:
1. AREA CHOSEN FOR STOCKPILING OPERATIONS SHALL BE DRY AND STABLE.
2. MAXIMUM SLOPE OF STOCKPILE SHALL BE 1V: 2H.
3. UPON COMPLETION OF SOIL STOCKPILING, EACH PILE SHALL BE SURROUNDED WITH SILT FENCING, THEN STABILIZED WITH VEGETATION OR COVERED.
4. SEE SPECIFICATIONS FOR INSTALLATION OF SILT FENCE.
5. HAYBALES TO BE USED WHERE STOCKPILES ARE LOCATED ON PAVED AREAS.

MATERIALS STOCKPILE

NOT TO SCALE

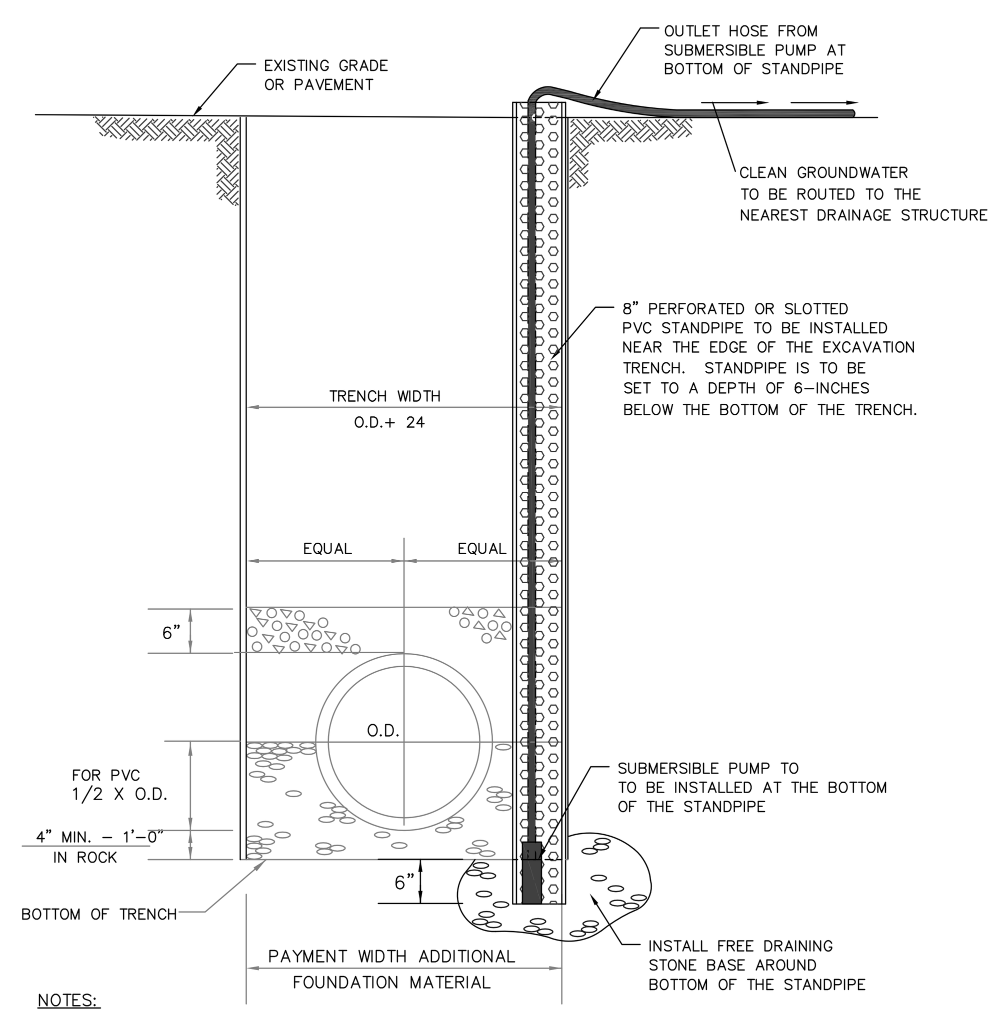

NOTES:

1. STANDPIPE LOCATIONS ARE TO BE FIELD DETERMINED BY THE SITE CONTRACTOR ON AS NEEDED BASIS. STANDPIPES SHOULD BE INSTALLED UPSTREAM OF TRENCHING ACTIVITIES FOR A LENGTH OF TIME DEEMED SUFFICIENT TO AID IN DEWATERING THE SUBSOIL.
2. A GAS POWERED GENERATOR WILL ALSO BE REQUIRED TO POWER THE SUBMERSIBLE PUMP.
3. SEDIMENT LADEN GROUNDWATER SHOULD BE PUMPED TO A "DIRTBAG" OR PUMPING SETTLING BASIN TO CLEAN THE RUNOFF BEFORE DISCHARAGING. CONSULT PROJECT ENGINEER BEFORE DEWATERING

SUGGESTED TRENCH DEWATERING PRACTICE

NOT TO SCALE

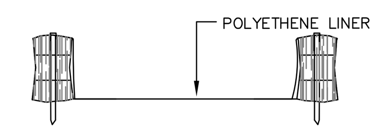

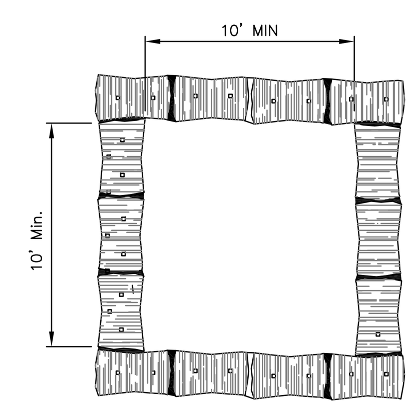

NOTES:
1. CONCRETE WASHOUT SIGN TO BE INSTALLED WITHIN 30 FEET OF THE TEMPORARY CONCRETE WASHOUT FACILITY.
2. REMOVE HARDENED CONCRETE WHEN WITHIN 4" FROM TOP OF STRUCTURE.
3. CONSTRUCT NEW FACILITIES ONCE CURRENT FACILITIES ARE TWO–THIRDS FULL. IF CONCRETE HAS NOT HARDENED CONSTRUCT NEW FACIILITIES ONCE CURRENT FACILITY IS TWO–THIRDS FULL.
4. LINERS, HAYBALES, ET.C SHALL BE INSPECTED FOR DAMAGE. ANY DAMAGE SHALL BE REPAIRED PROMPTLY.
5. SEPARATE FACILITIES TO BE USED FOR VEHICLE WASHING IF NEEDED.
6. NO CONCRETE IS TO BE WASHOUT OUT ON THE GROUND IN ANY LOCATION.

ABOVE GROUND TEMPORARY CONCRETE/VEHICLE WASHOUT FACILITY

NOT TO SCALE

X:\Jobs\Jobs 2012\12–1263_Kirchhoff_Hoffman Farm\DWGS\DN12126305.dwg
Layout: DETAIL SHEET 30X42

KIRCHHOFF PROPERTIES

#	Date	Revisions:
1.	06.27.14	REVISED PER NEW LAYOUT AND DESIGN
2.	09.05.14	REVISED PER NEW LAYOUT AND DESIGN
3.	09.25.14	SUBMISSION FOR SKETCH ENDORESEMENT
4.	10.10.14	REVISED PER TOWN COMMENTS
5.	01.23.15	REVISED PER TOWN COMMENTS
6.	03.27.15	REVISED PER TOWN COMMENTS
7.	06.05.15	REVISED PER TOWN COMMENTS

LRC GROUP
• Land Planning
• Civil Engineering
• Environmental Services
• Land Surveying
• Landscape Architecture
85 Civic Center Plaza, Suite 103
Poughkeepsie NY 12601
Tel:845.243.2880
Fax:845.265.8175
160 West Street, Suite E
Cromwell, CT 06416
Tel:860.635.2877 Fax:860.635.4226
www.lrcconsult.com
Land Resource Consultants, Inc.
LRC Engineering & Surveying, P.C.
LRC Environmental Services, Inc.
LRC Engineering and Surveying, LLC

EROSION CONTROL DETAILS

HOFFMAN PROPERTY

OLD FARM ROAD
TOWN OF RED HOOK
DUTCHESS COUNTY NEW YORK

Designed	SMC	CAD File	DN12126305	
Drawn	SMC	Project No.	12-1263	DN-5
Checked	KFC	Date	01.16.13	
Approved	REM	Scale	NTS	Sheet 28 of 28